PID Eng&Tech

www.pidengtech.com

PROCESS INTEGRAL DEVELOPMENT ENG&TECH

MICROACTIVITY–REFERENCE CATALYTIC REACTOR

Journal nº 10, January 2011

COMPANY PROFILE

PID Eng&Tech was born in 2003 as a **spin-off company of Spanish Council for Scientific Research (CSIC)** with 20 years of previous accumulated experience. The Process Control Group of the Institute of Catalysis and Petrochemistry (ICP) of the CSIC have devoted its activity since 1989 to the development of technologies dedicated to improving design, construction and operation mode of laboratory-scale reactors and micro-scale pilot plants, and their data acquisition, supervisory and control systems.

PID Eng&Tech was awarded with the prize of the "Contest of Ideas for Spin-off companies of Researchers", granted by the Universities and Research General Management of Spain.

PID Eng&Tech staff is formed by experts with multidisciplinary backgrounds in chemical engineering, electronics, automated and software engineering. Launched in 2003, with a head office in the Scientific Park of Madrid, Process Integral Development Eng&Tech was able to put into practice all the experience, technological development and innovations achieved over many years of working in engineering field. From 2005, PID Eng&Tech's office and laboratories are situated in Colmenar Viejo (Madrid), near the Natural Park of Hoyo de Manzanares

PID Eng&Tech primary **target market** are universities and research centres, both private and public sectors, which fulfil their research activities within the fields of basic chemistry, petrochemistry, environment, catalysis, agro chemistry and food technology, supercritical fluid extraction and new energies.

In addition, the company has a **worldwide net of distributors** that cover the worldwide countries and areas: The United States of America, South and Central America, Europe, Canada, Saudi Arabia and the Middle East, Asia, Africa and Australia.

pid@pidengtech.com
PH: +34 918 459 930
C/ Plomo 15 – Pol. Ind. Sur
E-28770 Colmenar Viejo
Madrid – Spain

www.pidengtech.com

His Royal Highness the Prince of Spain Don Felipe de Borbón at the inauguration

MICROACTIVITY-REFERENCE DATA SHEET

*The **MICROACTIVITY-Reference** is an automatic and computerized laboratory reactor for reactions of catalytic microactivity with reactor bypass, preheater evaporator, pressure control valve and other process layouts inside a **hot box**, which avoids the possible condensation of volatile products, at the time that preheats the reactants efficiently.*

*The **MICROACTIVITY-Reference** consists of a **BASIC UNIT** and some series of **EXTRA PACKAGES** that improve or modify its efficiency. It is a single structure that contains the electronic unit, control and MFC's system and includes the hot box where the reactor and process valves are located. The system has local control and on-line remote control, based on **TCP/IP Ethernet** communications with distributed control structure. A complete and elaborated security system is integrated in microprocessor, independent of the computer.*

For reactions at high pressure that involve separation of gases and liquids, a new system of level control of the condensed liquid is introduced with almost no dead volume (0.3 ml), so that the sample of the liquid outlet is the condensed product mixture formed at the very last minutes of reaction. A wide variety of reactions has been carried out in our reactors: Hydrocracking, Hydrotreating, Isomerization, Hydrogenation, Hydrodesulphurization (HDS), Oxidation, Hydrodenitrogenation (HDN), Polymerization, Reforming (aromatization), steam reforming, etc. Strategic alliances with our customers have induced to some of the most important technological solutions at present for a variety of catalytic processes.

BASIC UNIT FEATURES:

- TFT touch screen process set-up
- Hotbox in SS 316 with convector of hot air. Max. recommended temperature 180ºC ± 1ºC.
- Reactor oven in inox 304. Max. temperature 950ºC, ± 2ºC. Low thermal inertia.
- Tubular reactor AE in inox 316, max. recommended temperature 700ºC.i.d.=9,2 mm, L=300 mm, fittings AE SF 562 CX. Porous plate in Hastelloy C-276, 20 microns.
- Thermocouple Ø=1,5 mm, incoloy, directly in catalyst bed, without thermowell.
- Valve VICI 6 ports, 2 positions, 280ºC, 100 bar, for reactor bypass.
- 3 MFC's Hi-Tec Bronkhorst for a Basic Unit, precision 1% F.S., elastomers compatible with the process.
- 3 shut-off valves, 3 check-valves and a gas-mixer in a Basic Unit, 6 MFC's max.
- Thermoelectric unit for liquids condenser / separator.
- Check-valve for feeding of liquids, cracking pressure 10 psig.

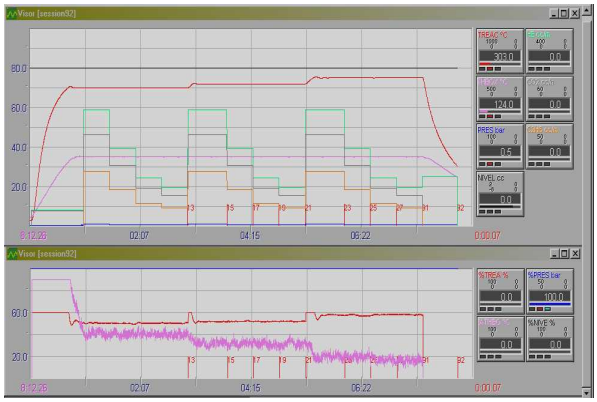

- Thermocouple Ø=1,5 mm, incoloy, directly in catalyst bed, without thermowell.
- Spiral layout for liquid evaporator or preheater and gases preheater.
- Pressure transducer in the atmospheric or high-pressure unit.
- 250ºC heated line to chromatograph connection.
- The CG unit is not included in this offer. HP or Varian is recommended with software for Windows.
- Furnace & oven powered through 3 SSR proportional control 4/20 mA by phase angle control.
- Security system based on integrated microprocessor RS 485 (detector of flow fail, pressure, temperature, level in separator).
- Max. work pressure 100 bar. Work pressure in a Basic Unit: 1 bar.
- Layout, fittings and valves are in inox 316, with very low dead volume, Hoke-Gyrolok, Swagelok, Autoclave Engineers, VICI-Valco quality.
- Friendly supervision and distributed control software in real time
- Process@ digital communication, Ethernet remote control.
- Includes Pentium IV. 17" TFT. Process@ software for Windows.
- Programmable recipes for automatic processing of works.

EXTRA PACKAGES:

MFC: 4th, 5th and/or 6th MFC's with power supply and valves.
PRES: High Pressure Unit includes pressure control system, based on micrometric servo-controlled valve, 100 bar max, +/-0.2 bar, 210ºC. PID Eng&Tech patented design. PID loop controller.
PUMP: Gilson HPLC liquid pump, 0.01-5 ml/m, 400 bar. Digital communications.
LEVEL: Liquid/gas separator with level control for operation with liquids and gases at high pressure in continuous mode, zero dead volume, based on micrometric valve servo-controlled and capacitive sensor level with approx. 0.3cc dead volume with precision +/- 0.1cc in level control. 100 bars. PID Eng&Tech patented design.
TWO LIQUID PHASES SEPARATOR: New upgraded application for use in Fisher-Tropsch (GTL) reactions. Real time separation at high pressure obtaining at system outlet separated products as Water + Hydrocarbons + gases.
SCALE: Scale for weighting liquid output in real time. Digital communications module.
MFM: MFM in exit gases line (for on-line supervising procedures).
VICI: 2nd VICI valve, 6 ports, 2 positions. Only for special purposes.
REAC: Construction materials of the reactor: Hastelloy C or Hastelloy X, Inconel 625, Titanium, and special dimensions (id= 5.2 to 23mm).

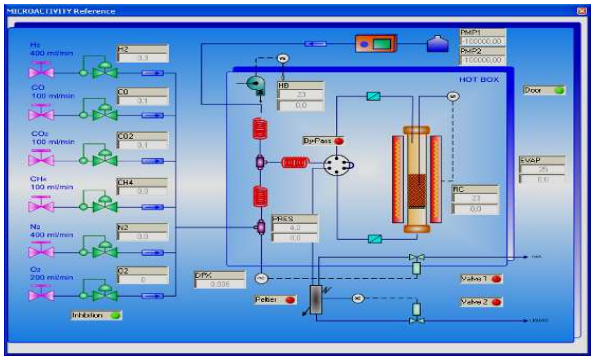

MICROACTIVITY

LABORATORY CATALYTIC REACTOR

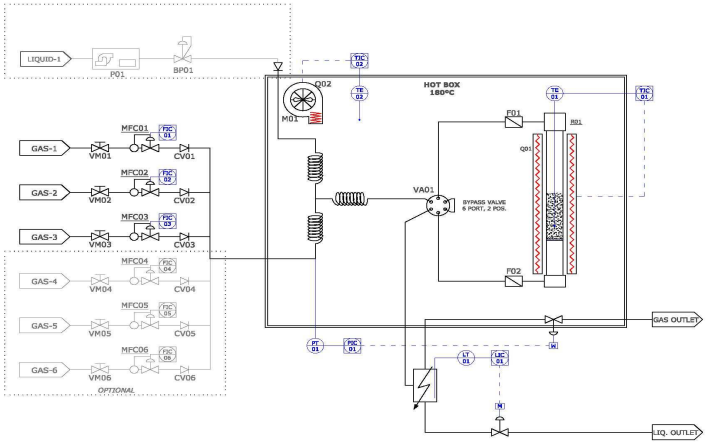

ATMOSPHERIC PRESSURE BASIC UNIT

- Tubular reactor Autoclave Engineers 700º with porous plate
- Thermocouple, directly in catalyst bed
- Hotbox 170ºC
- VICI valve 6 ports, for reactor bypass.
- 3 MFC's, Hi-Tech Bronkhorst
- Thermoelectric unit for liquids condenser / separator.
- Microprocessor for security integrated system
- 2 Control loops for temperature
- 6 Control devices for MFC's.
- Work pressure in atmospheric basic unit: 1 bar.
- Design pressure: 100bar
- Layout, fittings and valves in inox 316L, very low dead volume
- Friendly supervision and distributed control software by PC
- Ethernet remote control

HIGH PRESSURE UNIT FOR GASES ONLY

Atmospheric Pressure Basic Unit &:

- Pressure control system, based on servo-controlled micrometric valve by 1st precision stepper motor
- PID Eng&Tech patented design
- 100 bar max. ± 0.2 bar
- Control loop and 100 bar pressure transducer
- Digital communications

HIGH PRESSURE UNIT WITH LIQUID-GAS SEPARATOR

High Pressure Basic Unit &:

- Liquid/gas separator with level control, in continuous mode, based on servo-controlled micrometric valve and capacitive sensor level with approx. 0.3cc dead volume
- PID Eng&Tech patented design
- Cooling by Peltier thermoelectric effect
- Control loop and capacitive sensor
- Digital communications
- Two models: L1 or L2 (two phases)

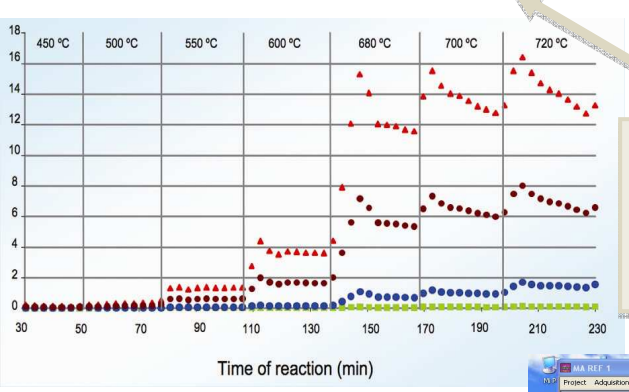

EXTRA PACKAGES OR OPTIONS

- HPLC Gilson pump, 400 bar, 0.01-5 ml/min
- Up to 4, 5 or 6 Mass Flow Controllers
- Scale in liquid outlet
- Mass Flow Meter in gas outlet
- Construction materials or reactor dimensions
- 2nd VICI-Valco valve for special proposals

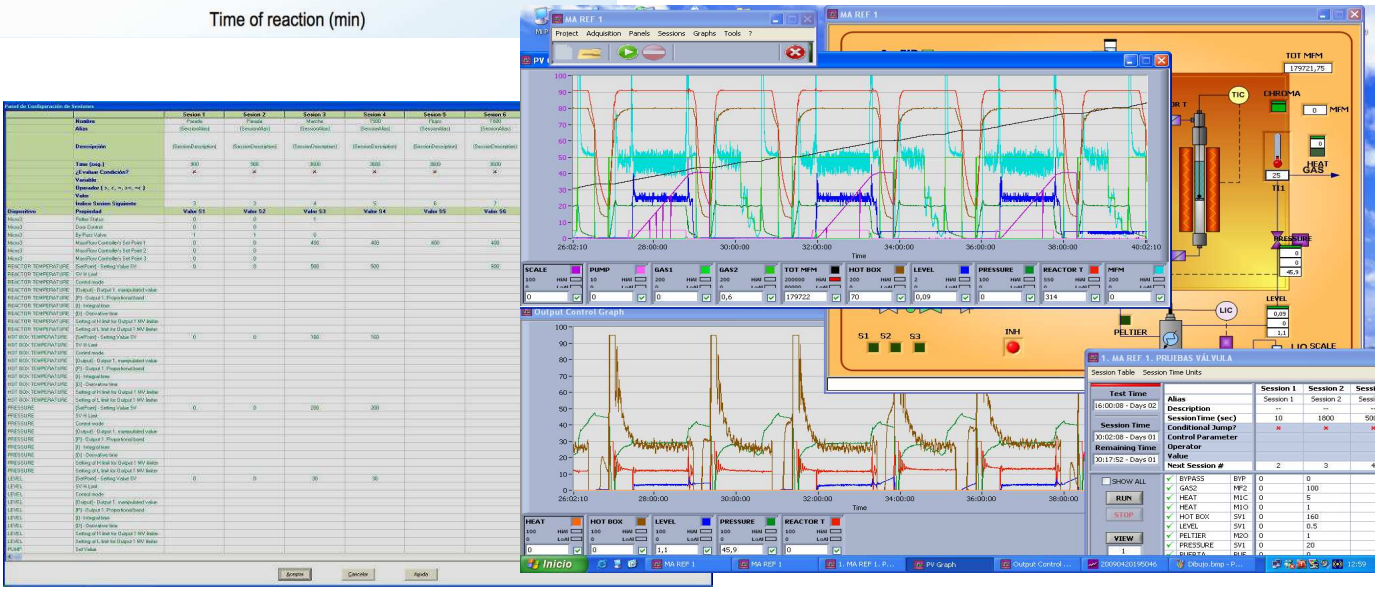

MICROACTIVITY REFERENCE

The reference in modular catalytic reactor…

The Microactivity-Reference reactor

is probably the most advanced worldwide modular laboratory system for measurement of catalytic activity and selectivity **(WO-2006008328 / EP-1757930 / US-2008063565)**. PID Eng&Tech, is a worldwide leading company at sector of Microreactors for Catalytic studies. This instrument has been developed as a standard unit that can be adapted to whatever performance is needed for catalytic testing through different configurations and options.

The Microactivity-Reference is a compact reactor that is completely automated. It is equipped with cutting-edge process control technology in the market. This enables the user to program a series of experiments from the computer, even on the network, and obtain real-time results with the highest degree of reproducibility and accuracy.

This equipment has been designed to save time and resources at both, catalyst development stage and factory report process during catalyst screening.

Originally designed by and for researchers at Instituto de Catálisis y Petroleoquímica of CSIC, Spain, incorporating 20 years of continuous feedback from the most prestigious Laboratory Researchers, the Microactivity-Reference has become an international reference with more than 170 units worldwide studying all types of catalytic reactions. It is backed by its reliability, versatility, operating simplicity and minimal maintenance.

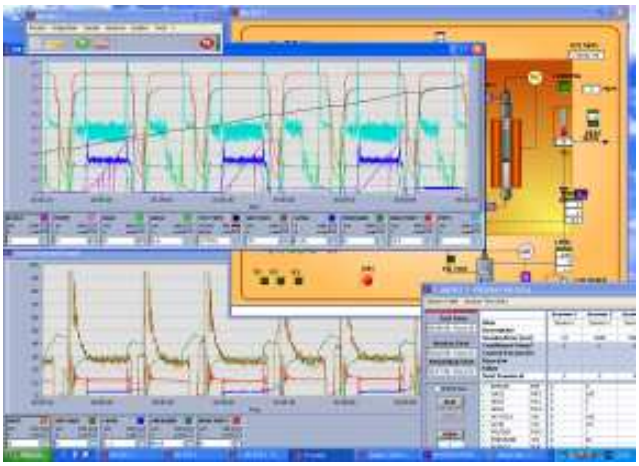

AUTOMATIC AND COMPUTERIZED MICROACTIVITY REACTOR

The patented control systems have been specifically developed for this equipment. They account for operating at the microscale. There are no systems with similar characteristics in the market for working with microflows.

Microactivity-Reference is a universal equipment that provides great versatility. It operates with flows that range from tens of ml/min to even liters/min, and pressures ranging vacuum to 100 bar (with the same pressure control valve). The reaction temperature ranges from room temperature to 1000ºC (using special material reactors).

More than 260 users has developed his works in this unit working at many different areas and with different types of reaction without specifics changes in his configuration.

Patents:
WO-2006008328
EP-1757930
US-2008063565

The equipments of PID Eng & Tech are certified according to European standards PED97/23/EC (Pressure equipment), 2004/108/EC (Electromagnetic Compatibility) and 2006/95/EC (LVD-Electrical Safety)

MICROACTIVITY REFERENCE

THE BASIC UNIT

The basic unit , the simplest one, designed for working at atmospheric pressure, includes a mixing gases unit based on MFCs with three units for the standard equipment, a tubular reactor SS316 with a 9 mm inner diameter, on the inside of a radiating oven capable of reaching 1000ºC with very low thermal inertia, a reactor bypass enables isolating it while the feed analysis is being performed, and a liquid-gas separator (cooled via thermoelectric effect) at the outflow separates liquid products. The gases are fed to the analysis system via a temperature transfer line of up to 300ºC.

All components that comprise the equipment are housed inside of a **hot box**. This makes it possible to keep the incoming and outgoing product feed lines at a temperature of up to 190ºC. This prevents volatile products condensation, thus maintaining the entire process's path insulated. This gives stability to the flows, and prevents the presence of cold points.

The basic equipment includes the hot box, the control systems and a sophisticated safety system; which makes it a piece of equipment with an extraordinary level or reliability. Furthermore, this system may be configured by the user via a local touch-screen, independent of the computer according to a distributed control philosophy. It thus gives maximum priority to the safety of the equipment itself and its users. Finally, communication via Ethernet between the equipment and the controlling computer makes it possible to program experimental formulas, acquire system data and remote control from any workstation.

CONFIGURING THE UNIT

(P) High pressure: This option adds a pressure control loop to the basic unit; it enables working up to 100 bar with an accuracy of 0.1bar. Pressure control is based on a servo motorized micrometric regulation valve **(WO-2006021603 / EP-1775504 / US-2007241296)** that gives it maximum stability in pressure control thus minimizing the piston flow pulse effect of the stream that flows across the catalyst bed. This system, developed especially for the Microactivity-Reference, deliver excellent reproducibility in experimental data.

(G) Liquid Feed: This option enables a liquid feed via an HPLC pump, for working in either the liquid or steam phase, and operating at pressures of up to 100 bar. The pump is installed with the necessary accessories to ensure a continuous flow that is precise and without pulse, even when the feed is to be evaporated.

(L1) High pressure liquid-gas separator: A **microvolume** system for liquid-gas separation at a reactor's outflow that operates at high pressure **(WO-2006021604 / EP-1757911 / US-2007238753)** is perhaps the Microactivity-Reference main contribution to quick evolution and development in experimentation in the field of catalysis. With a dead volume less than 0.5 ml, this system enables real time separation of condensables, thus making it possible to learn the composition of the liquid products obtained during the first reaction minutes. This makes it possible to study reaction kinetics and catalyst deactivation since the condensate during reaction is representative of the last few minutes.

(L2) High pressure liquid-liquid-gas separator: This is the latest evolution with which PID Eng&Tech contributes the advance in catalytic reaction control. This configuration option (patent pending: P200930603) is an evolution of the aforementioned liquid-gas separating system. It enables separation of two non-miscible liquid fractions, e.g. for use in **Fisher-Tropsch** reactions **(GTL).** The high-pressure separator has no appreciable dead volume and produces three differentiated phases in real time: the condensable hydrocarbon, water and the gaseous fraction with lighter hydrocarbons.

MICROACTIVITY REFERENCE

THE OPTIONS

Starting with a basic unit, and through the configuration options, the Microactivity-Reference unit can be customized for working at high pressure with the possibility of feeding liquids, or with two high-pressure liquid-gas separating models. The different **options** adapt the Microactivity-Reference reactor to match any project requirement. The know-how acquired during the execution of more than 170 installations enables us to configure a unit tailored to each user and process's specific needs. Some representative options are listed below:

- Optional reactors of 5, 13 and 17 mm in inner diameter, in Hastelloy C276, Hastelloy X, Inconel 600, Inconel 625, SS310 materials and others. Allowing adapting the unit to the specific characteristics of reaction type, temperature, pressure and reacton feed.
- The system can incorporate up to 6 MFCs without changing the original configuration. The outstream can be measured by a mass flow meter (MFM) installed at the gas exhaust or weight scales (both for the feed vessel and for the liquid outflow); thus, it is possible to monitor the system evolution and mass balance.
- In systems with high-viscosity liquids, e.g. an HVGO, the HPLC pump, feed vessel and the hot box's external path is heated at 80ºC.
- A second and even a third six-port valve switches between up/down flow through the catalyst bed or, for instance, be used for bypassing the L/G separator, in the event the unit is used for reactions where there is no liquid present.
- Other options enable additional evaporators, separator temperature control, ovens with special dimensions, pressures above 100 bar, more than one liquid feed pump, fluidized beds, two or more serial units to be installed with different operating pressures, among others. It is also possible to prepare complete laboratories with 8 or 16 Microactivity-Reference units with adaptable configuration.
- Customized units can also be designed for special purposes.

WORLDWIDE DISTRIBUTION

PID Eng&Tech MICROACTIVITY-Reference Reactors 1991-2010																					
COUNTRY / YEAR	1991	1992	1993	1994	1995	1996	1997	1998	1999	2000	2001	2002	2003	2004	2005	2006	2007	2008	2009	2010	TOTAL
	Catalyst and Petrochemistry Institute - CSIC (Spain)												PID Eng&Tech								
TOTALS	6	5	5	8	7	6	5	6	6	7	7	6	10	14	19	21	25	27	59		254
Europe																					172
Spain	6	5	4	7	6	6	4	4	6	5	6	5	5	8	6	8	11	9	13	5	129
Italy							1									1					2
Greece				1	1											1					3
France																	1		2	2	5
Germany															1		1			2	4
Romania																		1			1
Sweden																1		1	1		3
Belgium												2						1		1	4
Cyprus											1			1				1			3
Norway																	1				1
Finland																	1	2			3
Austria																	1				1
Slovenia															1				1	1	3
Poland																1			1	2	4
Czech Republic																			1	2	3
Bulgary																				1	1
The Netherlands																				1	1
Latvia																				1	1
North America																					16
USA														1	2	1	2	2	2	6	16
South America																					16
Mexico			1																		1
Argentine															1						1
Brazil															1	1		1	1	9	13
Venezuela																			1		1
Asia																					8
Russia															1		2	1			4
Vietnam																		1			1
India															1	1				1	3
Persian Gulf																					42
Saudi Arabia								1		1			1			1	1	4	4	25	38
Jordan																		1			1
Oman																1					1
Egypt																2					2

MICROACTIVITY REFERENCE

WORLWIDE USERS

CUSTOMER	COMPANY / CENTER	COUNTRY	UNITS
Dr. A. Aguayo / Dr. J.M. Arandes/ Dr. J. Cambra/ Dr. M. Montes	Universidad del País Vasco		15
Dr. A. Jiménez / Dr. Blanco/ Dr. T. Cordero / Dr. L. Alemany	Universidad de Malaga		4
Dr. A. Pintar	National Institute of Chemistry	Slovenia	3
Dra. L. Daza	Instituto de Catálisis y Petroleoquímica / CIEMAT	Spain	7
Dr. A. Selvanathan / Dr. Debashis/ Dr. Khalid. S. Karim/ Dr. Tony Joseph	SABIC Research &Technology Badadora	India	6
Dr. C. Jiménez/ Dr. J.M. Campelo / Dr. M. Rubio	Universidad de Córdoba		4
Dr. Costas N. Costa	University of Cyprus	Cyprus	2
Dr. E. Gaigneaux / P. Ruíz	Catholic University of Louvain	Belgium	2
Dra. Gómez / Dr. Gilarranz / Dr. Casas	Universidad Autónoma de Madrid		4
Dr. Israel E. Wachs	Lehigh University	USA	1
Dr. J. A. Odriozola / Dr. Ollero / Dr. Munuera	Universidad de Sevilla		5
Dra. Sonia Abelló Cros	IREC - Inst. de recerca en energia de catalunya		1
Dr. K. Sapag	Universidad Nacional de San Luis	Argentina	1
Dr. J. L Gª. Fierro	Instituto de Catálisis y Petroleoquímica		5
Dr. T. Leonnides	ICE/HT FORTH	Greece	1
Dr. J. M. Pintado / Dr. Mtnez de la Osa	Universidad de Cádiz		2
Dr. J. Pis	Instituto Nacional de Carbón		2
Mr. Alok Sharma	Indian Oil Corporation	India	1
Dr. Khalid El Yahyaoui	SABIC R&D Center Riyadh, Saudi Arabia	Saudi Arabia	1
Pawel Wodja	Labsoft	Poland	1
Dr. L. Gandía / Dr. A. Gil	Universidad de Navarra		4
Dr. L. Gora	Institute of Polish Academy Science	Poland	1
Fatima Zotin	Universidade do estado do rio de janeiro	Brazil	1
Kristina Magilat	HENKEL STYLE S.A.	Latvia	1
Dr. Yahia Alhamed	King Abdulaziz University.	Saudi Arabia	1
Mrs. Olga Golivkina – NEOLAB	JSC Moscow Oil Refinery	Russia	1
Dr. Miguel A. González	Universidad de Tarragona		1
Dr. Miguel Ángel Bañares/ Dr. Arturo Martínez	Instituto de Catálisis y Petroleoquímica		2
Dr Hoang Anh Tuan	Saigon Instrumentation Join Stock Company	Vietnam	1
Dr. Narcis Homs	Universidad de Barcelona		3
Dr. Lachezar Angelov Petrov	King Abdulaziz University	Saudi Arabia	1
Dr. Van Grieken / Dra. Carrero / Dr. Serrano / Dr. Botas	Universidad Rey Juan Carlos		5
Dr. S. Al-Zahrani	King Saud University	Saudi Arabia	1
Dra. Daniela Zanchet	Associaçao Brasileira de Tecn. De Luz Sincrotron	Brazil	1
Dr. V. Augugliaro	Universidad de Palermo	Italy	1
Dr. V. Cortés / Dr. J. Prieto	Instituto de Catálisis y Petroleoquímica		3
Dr. Sippola Vaino	NESTE OIL	Finland	3
Dr. V. V. Fadeev	YUKOS R&D Centre	Russia	1
Dr. A. Fernández	Petresa (Cepsa)		1
Mr. Brook March	Altamira Instruments	USA	1
Dr. David Coker	RTI	USA	1
Dr. E. Caló / Mrs. G. Monteleone	Enea-Cassacia	Italy	1
Dr. Gerd Rabenstein	University of Graz	Austria	1
Dra. Viviane Schwartz	Oak Ridge National Laboratory	USA	1
Dr. G. Ovejero	Universidad Complutense de Madrid		1
Dr. Victor Texeira da Silva / Dra. Mariana de Mattos	Fundação COPPETEC	Brazil	3
Dr Gregg Deluga	General Electric	USA	4
Dra. Ana Gayubo	Universidad del País Vasco		2
Dr. De Chen	Norwegian University of Sciencie & Technology	Norway	1
Dr. Kuman	Noisk	Russia	1
Dr. Jean Thivolle	Centre Nacional de la Recherche Scientifique	France	1
Dr. J.I Gutierrez Ortiz	Universidad del País Vasco		3
Dr. Matthias Friedrich	Max Planck Institute	Germany	2
Dr. Sven Jaras	KTH University Division of Chemical Technology	Sweden	2
Dr. Ademir Donizete	Elekeiroz	Brazil	1
Dr. J. Mª Arauzo	Universidad de Zaragoza	Spain	1
Dr. Valer Almasán	ITIM – CLUJ NOPOCA	Rumania	1
Dr. Mark Tsodikov	Russian Academy of Sciences	Russia	1
Dr. Maged / Prof. Fathy	El Ghonemy Group.	Egypt	2
Dr. J. A. Menendez Diaz	Instituto del Carbón	Spain	1
Dr. Philipe Barthe	Corning European Technology Center	France	1
Dra. Mónica Antunes.	Universidad Rio de Janeiro	Brazil	1
Dr. Bjorn	NYNAS	Sweden	1
Mr. Raúl Alonso Sanz	DIGEMA		1
Dr. Jorge Rodríguez	INIVAP	Brazil	1
Dr. Andrzej Machocki	University of Maria Curie	Poland	1
Dra. Amaya Arteche	INASMET	Spain	1
Dr. Alkinany	King Abdul Aziz City for Science and Technology	Saudi Arabia	4
Dr. Alexandre Povel	Biocapital	Brazil	1
Dr. Leandro Martins	Fundaçao de Amparo a Pesquisa do Estado de Sao Pau	Brazil	1
Dr. Juan Coronado	IMDEA		1
Dr. Sebastien Norsic	Centre National de la Recherche	France	2
Dr. Jiri Cejka	Academy of Sciences of the Czech Republic	Czech Republic	1
Dr. Valverde	Universidad de Castilla la Mancha		1
Prof. Basset / Dr. Norsic / Dra Valeri Caps / Dr. Altaf Akbar	King Abdullah University of Science and Technology	Saudi Arabia	24
Prof. Maria Do Carmo Rangel	Universidade Federal da Bahia	Brazil	1
Dr. Zdenek Sobalik	Academy of Sciences of the Czech Republic	Czech Republic	2
Dr. Fabio Bellot / Dr. Alexandre Barros	Instituto Nacional de Tecnología	Brazil	3
Dr. Bernhard / Dr. J. Dringenberg	LAT - Labor und Analysen Technik GmbH	Germany	1
Dr. Michel Torregrossa	Equilabo	France	1
Dr. Patrick Wommack	Micromeritics	USA	6
Dr. Jac Bongaarts	Dow Benelux B.V.	The Netherlands	1
Dr. Łukasz Mokrzycki	IKiFP PAN	Poland	1
Mrs. Maria Antova	Overgas Holding AD	Bulgary	1
Mr. Muhammad Waseem (239)	Labomatic	Saudi Arabia	1

SCIENTIFIC PUBLICATIONS

USING MA-REF

Catalysts for Chlorinated VOCs Abatement: Multiple Effects of Water on the Activity of V Based Catalysts for the Combustion of Chlorobenzene.
F. Bertinchamps, A. Attianese, M. M. Mestdagh, Eric M. Gaigneaux
Catalysis Today, 112 (2006) 165-168

Surface modifications of □-Al_2O_3, SiO_2 and SnO_2 supports by titania grafting and their influence in the catalytic combustion of methane.
C. Mateos, S.R.G. Carrazan, P. Ruiz
Catalysis Today, 104, Issue 1-4 (2006) 107-111

Influence of the solid state properties of Pd/Mox(M=Ti, Al) catalysts in catalytic combustion of methane.
S.R. G. Carrazan, R. Mateos, V. Rives, P. Ruiz
Catalysis Today, 104, Issue 1-4 (2006) 161-164

Origin of transient species present on the surface of a PdO/□-Al_2O_3 catalyst during the methane combustion reaction.
O. Demoulin, M. Navez, P. Ruiz
Catalysis Today, 104, Issue 1-4 (2006) 153-156

Positive effect of NOx on the performances of VOx/TiO2 based catalysts in the total oxidation abatement of chlorobenzene.
F. Bertinchamps, M. Treinen, N. Blangenois, E. Mariage, E. M. Gaigneaux
Journal of Catalysis, 230 (2005) 493-498.

Modulation of selective sites by introduction of N2O, CO2 and H2 as gas promoters in the feed during oxidation reactions.
O. Demoulin, I. Seunier, F. Dury, M. Navez, R. Rachwalik, B. Sulikowski, S.R. Gonzalez Carrazan, E.M. Gaigneaux, P. Ruiz
Catalysis Today 99 (2005) 217-226

Investigation of parameters influencing the activation of a Pd/γ-alumina catalyst during methane combustion
O. Demoulin, G. Rupprechter, I. Seunier, B. Le Clef, M. Navez, P.Ruíz
Journal Physical Chemistry B,109,2005 20454-20462

High throughput experimentation applied to the combustion of methane and a comparison with conventional microreactor measurements.
O. Demoulin, M. Navez, F. Gracia,E. Wolf, P. Ruiz
Catalysis Today, 91-92 (2004) 85-89

Modification of Active Catalytic Sites with N_2O and CO_2 as Gas Promoters during Oxidation Reactions.
O. Demoulin, F. Dury, M. Navez E. Gaigneaux, P. Ruiz
Catalysis Today 91-92 (2004) 27-31

Understanding the Activation Mechanism Induced by NOx on the Performances of VOx/Ti Catalysts in the Total Oxidation of Chlorinated VOCs.
F. Bertinchamps, M. Treinen, P. Eloy, A.-M. Dos Santos, M. Mestdagh, Eric M. Gaigneaux
Accepted for publication in Applied Catalysis B

Systematic Investigation of Supported Transition Metal Oxide Based Formulations for Catalytic Oxidative Elimination of (Chloro-) Aromatics. Part I: Identification of the Optimal Main Active Phases and Supports.
Part II: Influence of the Nature and Addition Protocol of Secondary Phases to VOx/TiO2
F. Bertinchamps, C. Grégoire, E. M. Gaigneaux.
Accepted for publication in Applied Catalysis B

The oxidizing role of CO_2 at mild temperature on ceria based catalysts.
O. Demoulin, B. M. Navez, J. L. Mugabo, P. Ruíz
Applied Catalysis B: Environmental, in press.

Total Combustion of Methane on Pd/γ-Al_2O_3Based Catalysts Deposited On FeCrAlloy Fibers by Dip-Coating: Effect Of Pt Addition. A. Maione, F. André, P. Ruíz
International Symposium on the Scientific Bases for the Preparation of Heterogeneous Catalysts, Louvain-la-Neuve, Belgium, September, 2006

The activation of a Pd/g-alumina catalyst during methane combustion.
O. Demoulin, B. M. Navez, P. Ruíz
5th World Congress on Oxidation Catalysis (5thWCOC) 25-30 September 2005, Sapporo, Japan

Comparison of Pt and Pd alumina-supported catalysts towards the presence of H_2 in the feed in the catalytic combustion of methane
O. Demoulin,I. Seunier, M. Navez, P. Ruíz
5th World Congress on Oxidation Catalysis (5thWCOC) 25-30 September 2005, Sapporo, Japan

H_2-assisted catalytic combustion of methane on a Pd/γ-Al_2O_3
O. Demoulin, B. M. Navez, P. Ruíz
6th Int. Workshop on Catalytic Combustion (IWCC6), 14 September 2005, Ischia, Italy

The activation of a Pd/γ-Al_2O_3 catalyst during methane combustion
O. Demoulin, B. M. Navez, P. Ruíz
6th Int. Workshop on Catalytic Combustion (IWCC6), 14 September 2005, Ischia, Italy

The oxidizing role of CO_2 at mild temperature on ceria based catalysts
O. Demoulin, B. M. Navez, J. L. Mugabo P. Ruíz
4th International Conference on Environmental Catalysis 4th ICEC, 5-8 June 2005, Heidelberg, Germany

Influence of the solid state properties of Pd/MOx (M= Ti, Al) catalysts in catalytic combustion of methane
S. R. G. Carrazán, R. Mateos , V. Rives, P. Ruiz
First Conference of the Coordination Action "Co-ordination of Nanostructured Catalytic Oxides Research and Development in Europe (CONCORDE)" funded by European Commission, entitled "Understanding the dynamic and transient behavior of oxide catalysts in working conditions and the relationships with their catalytic performances" Louvain-la-Neuve (Belgium), January 26-28, 2005

Surface modifications of MOx oxides supports by titania grafting and their influence in the catalytic combustion of methane performances.
C. Mateos-Pedrero, P. Ruiz.

Understanding the dynamic and transient behaviour of oxide catalysts in working conditions and the relationships with their catalytic performances.
First Conference of the European Union Coordination Action "CO-ordination of Nanostructured Catalytic Oxides Research and Development in Europe": CONCORDE. Louvain-la-Neuve (Belgium), January 26-28, 2005

The dissociative adsorption of CO2 at low temperature: a new opportunity to implement the use of CO_2
E.M. Gaigneaux, F. Dury, C. Mateos, M. Navez, O. Demoulin & P. Ruiz
5th European Meeting on Environmental Chemistry. Bari, Italy, 15-18 December 2004

Modification of active sites by the introduction of gas promoters in the feed during oxidation reactions.
O. Demoulin, I. Seunier, F. Dury, M. Navez, R. Rachwalik, B. Sulikowskii, S.R.Gonzalez-Carrazan, E.M. Gaigneaux and P. Ruiz
3th Int. Congress on Catalysis, July 2004, Paris quitar

A Selective Combinatorial Approach: Application to the combustion of methane at low temperature.
O. Demoulin*, M. Nave, F. Gracia, L. Bollman, E.E. Wolf and P. Ruiz
Europacat VI, 7th European Workshop Meeting on Selective Oxidation "Innovative Selective Oxidations: Nanoscale and Dynamics Aspects" (ISO 2003), August 31-Sept 04, 2003, Innsbruck, Austria

Modulation of the active sites with CO_2 or N_2O as gas promoter during oxidation reactions.
O. Demoulin, F. Dury, M. Navez , E.M. Gaigneaux and P. Ruiz
Europacat VI, 7th European Workshop Meeting on Selective Oxidation "Innovative Selective Oxidations: Nanoscale and Dynamics Aspects" (ISO 2003), August 31-Sept 04, 2003, Innsbruck, Austria

The Role of Oxygen and Hydroxyl Support Species on the Mechanism of H2 Production in the Steam Reforming of Phenol and Toluene over Metal Oxide-Supported Rh and Fe Catalysts.
K. Polychronopoulou, C. N. Costa, A. M. Efstathiou
Catalysis. Today, 112 (2006) 89-93

Hydrogen Production by Ethylene Decomposition over Ni Supported on Novel Carbon Nanotubes and Nanofibers.
P. G. Savva, G. G. Olympiou, C. N. Costa, V. A. Ryzhkov and A. M. Efstathiou
Catalalysis Today, 102/103, (2005) 78-84

Novel Fe-Mn-Zn-Ti-O mixed-metal oxides for the low-temperature removal of H2S from gas streams in the presence of H2, CO2, and H2O.
K. Polychronopoulou, F. Cabello Galisteo, M. López Granados, J. L. G. Fierro, T. Bakas, A. M. Efstathiou
Journal. Catalysis, 236 (2), (2005). 205-220

Novel Zn-Ti-based mixed metal oxides for low-temperature adsorption of H2S from industrial gas.
K. Polychronopoulou, J. L. G. Fierro and A. M. Efstathiou
Applied Catalysis B: Environmental, 57 (2), (2005) 125-137

Hydrogen Production by Steam Reforming of Phenol over Novel Supported-Rh and Fe Catalysts.
K. Polychronopoulou, Z. Theodorou, C. N. Costa, A. M. Efstathiou
Chemical Engineering Transactions, 4, (2004).118

The phenol steam reforming reaction over MgO-based supported Rh catalysts.
K. Polychronopoulou, J.L.G. Fierro and A.M. Efstathiou
Journal Catalysis, 228 (2), (2004) 417-432

Effects of Support Surface Composition on the Activity and Selectivity of Pd/C Catalysts in Aqueous-Phase Hydrodechlorination Reactions.
L. Calvo, M. A. Gilarranz, A. F. Mohedano, J. A. Casas, J. J. Rodríguez
Industrial & Engineering Chemistry A, Vol. 44 (17) (2005) 6661 - 6667

Treatment of chlorophenols-bearing wastewaters through hydrodechloration using Pd/activated carbon. catalysts.
L. Calvo, A. F. Mohedano, J. A. Casas, M. A. Gilarranz, J. J. Rodríguez
Carbón A, Vol. 42 (7) (2004) 1377 - 1381

Complete oxidation of acetone over manganese oxide catalysts supported on alumina- and zirconia-pillared clays.
L. M. Gandia, M.A. Vicente, A. Gil
Applied Catalysis B, Vol. 38 (2002) 295-307

Platinum catalysts supported on Al-pillared clays. Application to the catalytic combustion of acetone and methyl-ethyl-ketone.
A. Gil, M.A. Vicente, J.-F. Lambert, L. M. Gandia
Catalysis Today, Vol. 68 (2001) 41-51

Effects of alkali-acid additives on the activity of a manganese oxide in catalytic combustion of ketones.
L. M. Gandia, A. Gil, S.A. Korili
Applied Catalysis B, Vol. 33 (2001) 1-8

SCIENTIFIC PUBLICATIONS
USING MA-REF

Influence of the surface adsorption-desorption processes on the ignition curves of volatile organic compounds (VOCs) complete oxidation over supported catalysts.
M. Paulis, L. M. Gandia, A. Gil, J. Sambeth, J.A. Odriozola, M. Montes
Applied Catalysis B, Vol. 26 (2000) 37-46

Preparation, Characterization and Catalytic Activity in the Deep Oxidation of Acetone of Cr, Al-Pillared Saponites.
A. Gil, M.A. Vicente, R. Toranzo, M. A. Bañares, L. M. Candia
Journal of Chemical Technology and Biotechnology, Vol. 72 (1998) 131-136

Influence of the Incorporation of Palladium on Ru/Mcm Hydrotreating Catalysts.
D. Eliche-Quesada, J. Mérida-Robles, E. Rodríguez-Castellón and A. Jiménez-López
Applied Catálisis B, Vol.:65 (2006) 118-126
Cobalt, Copper and Iron-Containing Monolithic Aluminosilicate-Supported Preparations for Selective Reduction of No with Ammonia at Low Temperatures.
M. Brandhorst, J. Zajac, D.J. Jones, J. Rozière, A. Jiménez-López, E. Rodriguez-Castellón
Applied Catalysis B, Vol.: 55 (2005) 267-76

Syntesis and Characterisation of Acid Mesoporous Phosphate Heterostructure (Pph) Materials
J. Jiménez-Jiménez, M. Rubio Alonso, D. Eliche-Quesada, E. Rodríguez-Castellón, A. Jiménez-López
Journal of Materials Chemistry, Vol.: 15 (2005) 3466-3472

Influence of the Metallic Precursor in the Hydrogenation of Tetralin over Pd-Pt Supported Zirconium Doped Mesoporous Silica.
M. C. Carrión, B. R. Manzano, F. A. Jalón, D. E. Eliche-Quesada, P. Maireles-Torres, E. Rodríguez-Castellón, A. Jiménez-López
Green Chemistry, Vol.: 7 (2005) 73-799

Copper and Silver Containing Monolithic Silica-Supported Preparation for Selective Propene-Propane Adsorption from Gas Phase.
M. Kargol, J. Zajac, D. J. Jones, J. Rozière, Th. Steriotis, A. Jiménez-Lópezand E. Rodríguez-Castellón
Chemistry of Materials, Vol.: 17 (2005) 6117-6127

Selective Catalytic Reduction of Nitric Oxide Over Cu- Exchanged Cuban Natural Zeolites.
R. Moreno-Tost, J. Santamaría-González, E. Rodríguez-Castellón, A. Jiménez-López. M. A. Autié, E. González, M. C. Glacial, C. de las Pozas
Applaid Catalysis B, Vol.: 50 (2004) 279-288

Nickel Supported on Porous Silica as Catalysts for the Gas-Phase Hydrogenation of Acetonitrile.
A. Infantes Molina, J. Merida Robles, P. Braos García, P. Maireles Torres, E. Rodríguez-Castellón, A. Jiménez López
Journal of Catalysis, Vol.:225 (2004) 479-488

No Reduction with Ammonia Employing Co/Pt Supported on a Mesoporous Silica Containing Zirconium as a Low Tempeature Selective Reduction Catalyst.
R. Moreno Tost, J. Santamaría González, E. Rodríguez-Castellón, A. Jiménez López
Applied Catalysis B, Vol. 52 (2004) 241-249

Cetane Improvement of Diesel with a Novel Bimetallic Catalyst.
M. Jacquin, D.J. Jones, J. Rozière, M. Jacquin, A. Jiménez-López, E. Rodriguez-Castellón, J.M. Trejo-Menayo, M. Lenarda, L. Storaro, A. Vaccari And S. Albertazzi
Journal of Catalysis, Vol: 228 (2004) 447-459

Hydrogenation and Hydrogenolysis/Ring-Opening of Naphtalene on Pd/Pt Supported Zirconium Doped Mesoporous Silica Catalyst.

Production of Hydrogen by Oxidative Reforming of Ethanol over Pt catalysts supported on Al2O3 Doped with Ce and La.
R. M. Navarro, M. C. Alvarez-Galván, M. Cruz Sánchez-Sánchez, J. L. G Fierro
Applied Catálisis B: Environmental. 55 (2005) 229

Removal of crcinogen PAH compounds by Pd catalysts
B. Pawelec, J. M. Campos-Martín, E. Cano-Serrano, R. M. Navarro, J. L. G Fierro
Environmental. Science. Technology, 39 (2005) 3374

Production of Hydrogen by Partial Oxidation of Methanol over Carbon-Supported Copper Catalysts.
R. M. Navarro, M. A. Peña, J. L. G. Fierro
Topics in Catalysis, 30/31 (2004) 481

Silica-alumina-supported transition metal sulphide catalysts for deep hydrodesulfurization.
B. Pawelec, R. M. Navarro, J. M. Campos-Martín, A. López-Agudo, P. T. Vasudevan, J. L. G. Fierro
Catalysis Today 86 (1-4) (2003) 73-85

Production of Hydrogen by Partial Oxidation of Methanol over a Cu/ZnO/Al2O3 Catalyst: Influence of the Initial State of the Catalyst on the Start-Up Behaviour of the Reformer.
R. M. Navarro, M. A. Peña, J. L. G. Fierro
Journal of Catalysis, 212 (1), (2002) 112-118

Oxidative methanol reforming reactions on CuZnAl Catalysts derived from hydrotalcite-like precursors
S. Murcia-Mascarós, R. M. Navarro, L. Gómez-Sainero, U. Costantino, M. Nocchetti, J. L. G. Fierro.
Journal of Catalysis, 198, (2001) 338-347
Aromatics Hydrogenation over sulphur resistent Pt-Pd alloys
R. M. Navarro, B. Pawelec, J. M. Trejo, R. Mariscal y J .L.G. Fierro.
Journal of Catalysis. 189 (2000) 184-194

Dibenzothiophene hydrodesulfurization on HY-zeolite supported metal sulfide catalysts
R. Navarro, B. Pawelec, P.T. Vasudevan, J. F. Cambra y P. L. Arias.
Fuel Processing Technology. 61 (1999) 73-88

Hydrodesulfurization over PdMo/HY zeolite catalysts
B. Pawelec, R. Navarro, J. L. G. Fierro, J. F. Cambra, J. F. Zugazaga, P. L. Arias
Fuel, 76 (1) (1997) 61-71

Reactivation of sintered Pt/Al_2O_3 Oxidation Catalysts.
F. Cabello Galisteo, R. Mariscal, M. López Granados, J. L. G. Fierro, R. A. Daley J. A. Anderson
Applied. Catalysis B, 59 (2005) 227-233

Reactivation of Commercial Diesel Oxidation Catalysts by Acid Washing.
F. Cabello Galisteo, R. Mariscal, M. López. Granados, J. L. G. Fierro, P. Bretes, O. Salas
Environmental Engineering, Science and Technology 39 (2005) 3844-3848

Chemical structures of coprecipitated Fe-Ce mixed oxides.
F. J. Pérez-Alonso, M. López Granados, M. Ojeda, P. Terreros, S. Rojas, T. Herranz, J. L. G. Fierro, M. Gracia, J. R. Gancedo
Chemistry of Materials 17 (2005) 2329-2339

TWC deactivation by lead: study of Rh/CeO_2 system.
C. Larese, M. López Granados, F. Cabello Galisteo, R. Mariscal, J. L. G. Fierro
Applied Catalysis B, 62 (2005) 132-143

Effect of mileage on the deactivation of vehicle-aged Three-Way Catalysts.
C. Larese, F. C. Galisteo, M. Granados, R. Mariscal, J. L. G. Fierro, R. F.-Ruíz, R. Sanguino, M. Luna
Catalysis Today, 107-108 (2005) 77-85

Metal-Support Interactions and Reactivity of Co/CeO_2 Catalysts in the Fischer-Tropsch Synthesis Reaction.
L. Spadaro, F. Arena, M. L. Granados, M. Ojeda, J. L. G. Fierro, F. Frusteri
Journal of Catalysis, 234 (2005) 451-462

Effects of Calcination Temperature on the Stability of $CePO_4$ Detected in Vehicle Aged Commercial Three-Way Catalysts.
C. Larese, F. Cabello Galisteo, M. López Granados, R. Mariscal, J. L. G. Fierro, P. S. Lambrou, A. M. Efstathiou
Applied Catalysis B, 48 (2004) 113-123

Deactivation on vehicle-aged diesel oxidation catalysts.
F. Cabello Galisteo, C. Larese, R. Mariscal, M. López Granados, J. L. G. Fierro, R. F.-Ruiz, M. Furió.
Topics in Catalysis 30-31 (2004) 451

Inhibition of the oxygenated compounds formation during CO hydrogenation over Rh/□-Al_2O_3 catalysts calcined at high temperature.
M. Ojeda, S. Rojas, F. J. G.-García, M. Granados, P. Terreros, J. L. G. Fierro
Catalysis Communications, 5 (2004) 703-707

Deactivation of real TWC catalysts by $CePO_4$ formation.
C. Larese, F. Cabello Galisteo, M. López Granados, R. Mariscal, J. L. G. Fierro, M. Furió, R. Fernández Ruiz
Applied Catalysis. B: Environmental,40 2003,305-317

Interfacial properties of Ir/TiO_2 systems and their relevance in crotonaldehyde hydrogenation.
P. Reyes, M. C. Aguirre, I. Melián-Cabrera, M. López Granados, J. L. G. Fierro
Journal of. Catalysis. 208 (2002) 229-237

Reverse topotactic transformation of a CuO-ZnO-Al_2O_3 catalysts during Pd impregnation: relevance for the performance of methanol synthesis from CO_2/H_2 mixtures.
I. Melián-Cabrera, M. López Granados, J. L. G. Fierro
Journal of Catalysis, 210, (2002) 273-284

Pd-modified Cu-Zn catalyst for methanol synthesis from CO_2/H_2 mixtures: catalytic structures and performance.
I. Melián-Cabrera, M. López Granados, J. L. G. Fierro
Journal of Catalysis, 210 (2002) 285-294

CO hydrogenation with Co catalyst supported on porous media.
K. Sapag, S. Rojas, M. López Granados, J. L. G. Fierro, S. Mendioroz
Journal of Molecular Catalysis A: Chemical, 167 (2001) 81-89

CO_2 hydrogenation over Pd-modified methanol synthesis catalysts.
I. Melián-Cabrera, M. López Granados, P. Terreros, L. G. Fierro
Catalysis. Today 45 (1998) 251-256

Role of the support in syngas gas conversion over Pd/Cu-KL zeolite catalysts.
J. Anderson, M. López Granados, M. F.-García
Journal of Catalysis, 176 (1998) 235-245

Spectroscopic evidences of Cu-Al interaction in Cu-Zn-Al catalysts used in CO hydrogenation to methanol.
R. Tavares Figueiredo, A. Martínez Arias, M. López Granados, L. G. Fierro
Journal of. Catalysis, 178 (1998) 146-152

SCIENTIFIC PUBLICATIONS

USING MA-REF

Bio-ethanol steam reforming: Insights on the mechanism for hydrogen production
M. Benito, J. L. Sanz, R. Isabel, R. Padilla, R. Arjona, L. Daza
Journal of Power Sources, 151 (2005) 11-17

Liquid phase oligomerization of 1-hexene over different mesoporous aluminosilicates (Al-MTS, Al-MCM-41 and Al-SBA-15) and micrometer/nanometer HZSM-5 zeolites.
R. Van Grieken, J. M. Escola, R. Rodríguez
Applied Catalysis, accepted.

Oligomerización de 1-hexeno en fase líquida sobre catalizadores mesoestructurados ácidos
R. van Grieken. J. M. Escola, R. Rodríguez
SECAT, June 2005, Madrid, Spain

Liquid phase oligomerization of 1-hexene over mesoporous aluminosilicates and nanocrystalline n-HZSM-5.
R. van Grieken. J. M. Escola, R. Rodríguez
3rd International FEZA, August 2005, Conference,
Liquid phase oligomerization of 1-hexene over mesoporous Al-SBA-15 and Fe-SBA-15 catalysts.
R. Van Grieken, J. M. Escola y R. Rodríguez
10th Mediterranean Congress of Chemical Engineering, November 2005, Barcelona, Spain

Hydrogen production by ethanol steam reforming over Ni-Cu supported catalysts.
A. J. Vizcaíno, J.A. Calles, A. Carrero
Proceedings of the 2nd European Hydrogen Energy Conference, November 2005, Zaragoza, Spain, Pag. 362-365

Basic promoters effect over nickel/alumina catalysts on hydrogen production via methane catalytic partial oxidation.
J. Requies, M. A. Cabrero, V. L. Barrio, J. F. Cambra, M. B. Güemez, P. L. Arias, V. La Parola, M. A. Peña, J L. G. Fierro
Catalysis Today

Hydrogen production from glycerol over nickel catalysts supported on Al2O3 modified by Mg, Zr, Ce or La.
A. Iriondo, V. L. Barrio, J. F. Cambra, P. L. Arias, M. B. Güemez, R. M. Navarro, M. C. Sánchez-Sánchez, J. L. G. Fierro
Topics in Catalysis, Aceptado

Modification of the Pd/SiO2-Al2O3 catalyst™s thioresistance by the addition of a second metal (Pt, Ru and Ni).
V.L. Barrio, P.L. Arias, J.F. Cambra, M.B. Güemez, B. Pawelec; J.L.G. Fierro.
Catalysis Communications, 5 (2004) 173-178

Hydrodesulfurization and hydrogenation of model compounds on silica-alumina supported bimetallic systems.
V. L. Barrio, P. L. Arias, J. F. Cambra, M. B. Güemez, B. Pawelec, J. L. G. Fierro.
FUEL, 82 (2003) 501-509

Hydrotreating on M-Pd/ASA catalysts to fulfill severe environmental regulations in diesel fuels.
V. L. Barrio, P. L. Arias, J. F. Cambra, M. B. Güemez, B. Pawelec, J. L. G. Fierro.
PREPRINTS Symposia, 47 ( ) 79-83

Methyl-naphthalene hydrogenation on Pt/HY-Al2O3 catalysts. An approach to hydrogenation of polyaromatic hydrocarbon mixtures.
P. L. Arias, J. F. Cambra, B. Güemez, V. L. Barrio, R. Navarro, B. Pawelec, J. L. G. Fierro.
Fuel Processing Technology, 64 (2000) 117-133
MnPd on alumina catalytic systems for methane combustion.
V. L. Barrio, P. L. Arias, J. F. Cambra, M. B. Güemez, V. de la Peña, M. C. Álvarez-Galván, J. L. G. Fierro.
Catalytic Combustion, 1 (2005) 160-164

Methyl-naphthalene hydrogenation on Pt/HY-Al2O3 catalysts. An approach to hydrogenation of polyaromatic diesel fuels.

V. L. Barrio, J. F. Cambra, M. B. Guemez, P. L. Arias, B. Pawelec, J. L. G. Fierro.
2nd World Congress on Environmental Catalysis. 1 (1998) 257-259

Kinetic Behaviour of the SAPO-18 Catalyst in the Transformation of Methanol into Olefins.
A. Gayubo, R. Vivanco, A. Alonso, B. Valle, A. Aguayo
Industrial & Engineering Chemistry Research, Vol. 44, 17 (2005) 6605-6614

Initiation Step and Reactive Intermediates in the Transformation of Methanol into Olefins over SAPO-18 Catalyst.
A. G. Gayubo, R. Vivanco, A. Alonso, J. Bilbao, A. T. Aguayo
Industrial & Engineering Chemistry Research, Vol. 44, 19 (2005) 7279-7286

Effect of Nickel incorporation on the acidity and stability of HZSM-5 zeolite in the MTO Process.
B. Valle, A. Alonso, A. Atutxa, A. G. Gayubo, J. Bilbao
Catalysis Today, Vol. 106 (2005) 118-122

Reaction Scheme and Kinetic Modelling for the MTO Process over a SAPO-18 Catalyst.
A. G. Gayuvo, A. T. Aguayo, A. Alonso, A. Atutxa, J. Bilbao
Catalysis Today, Vol. 106 (2005) 112-117

Study of Reaction Conditions and Kinetic Modelling of methanol Synthesis by CO_2 Hidrogenation.
J. Ereña, A. T. Aguayo, J. M. Arandes, I. Sierra, M. Olazar, J. Bilbao
19th International Symposium on Chemical Reaction Engineering, 3-6 September 2006, Berlin - Germany

Development of new low temperature methanol synthesis Catalysts.
J. Ereña, A. T. Aguayo, J. M. Arandes, I. Sierra, J. Bilbao
17th International congress. of Chemical and Process Engineering. 27-31 August 2006, Czech Republic

CONFIGURATION & OPTIONS

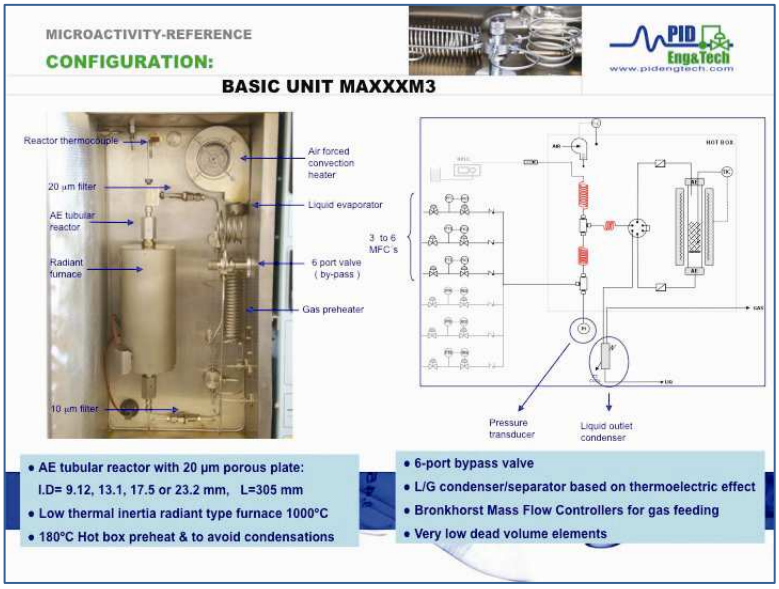

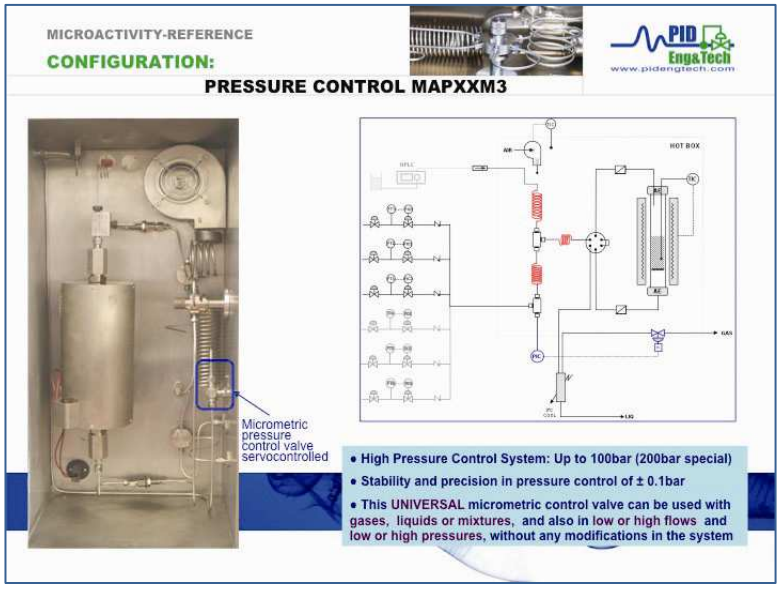

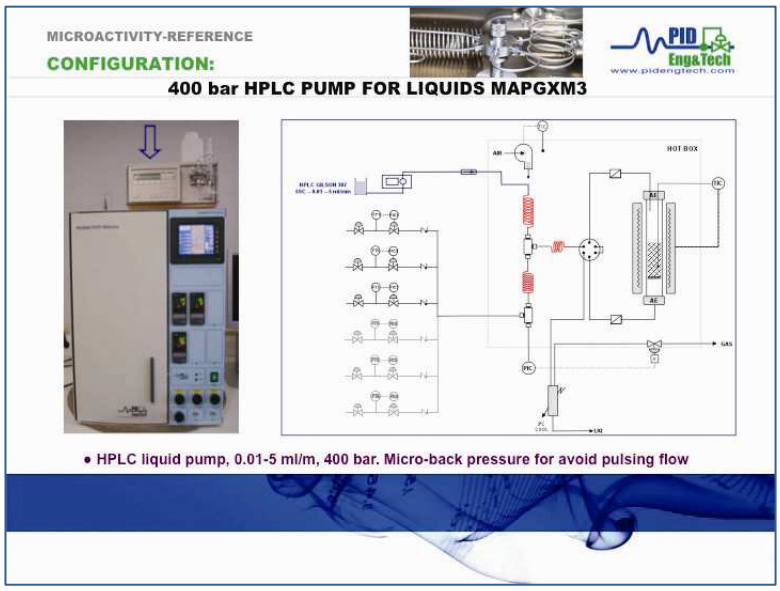

CONFIGURATION & OPTIONS

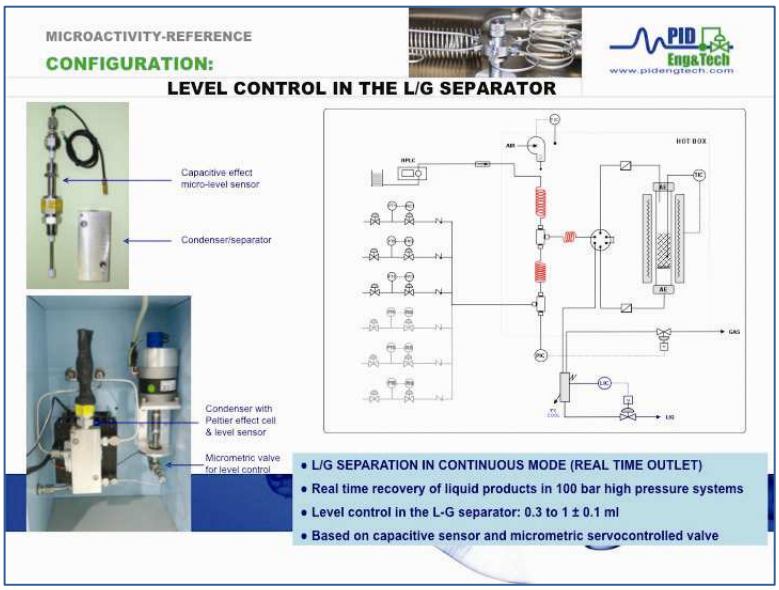

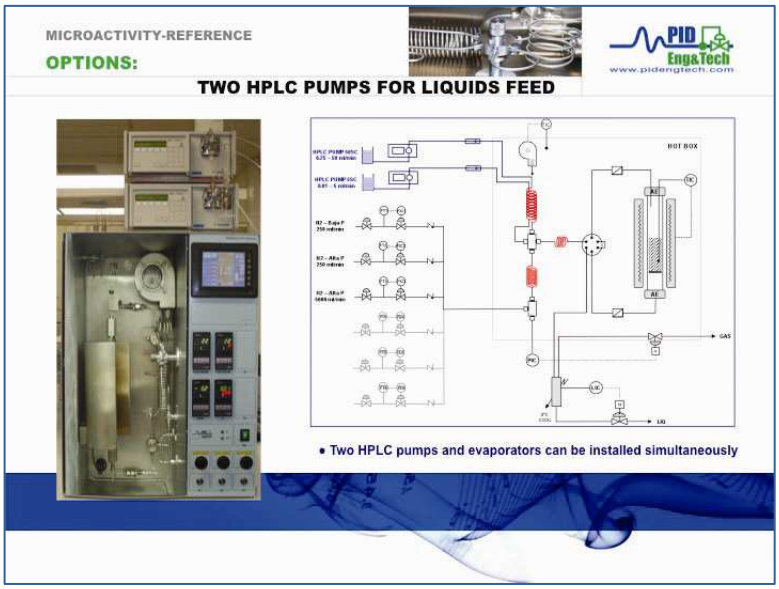

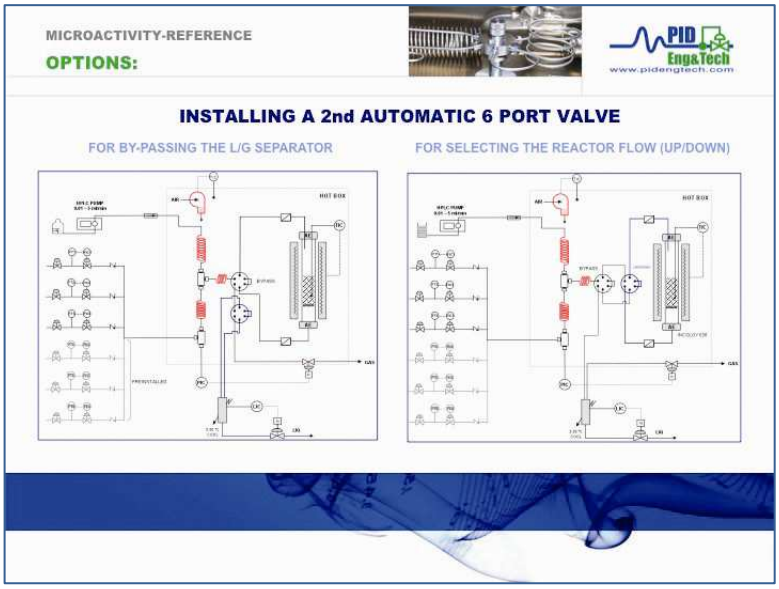

CONFIGURATION & OPTIONS

MICROACTIVITY-REFERENCE

OPTIONS:

INSTALLING 3 AUTOMATICS 6 PORT VALVES

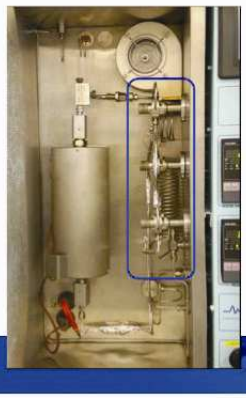

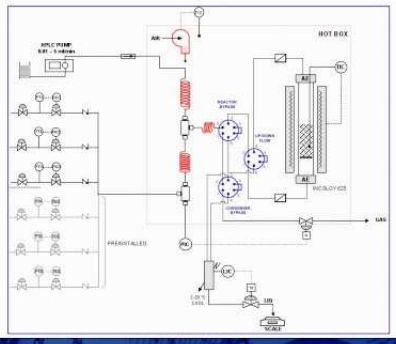

MICROACTIVITY-REFERENCE

OPTIONS:

1 OR 2 EVAPORATORS WITH TEMPERATURE CONTROL

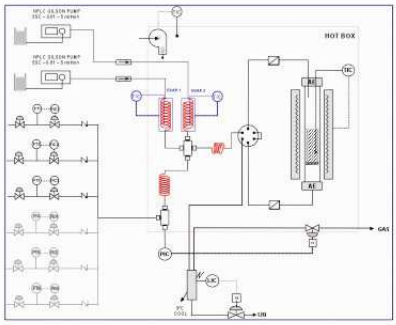

- Liquid evaporators with temperature control, up to 400ºC

MICROACTIVITY-REFERENCE

2010 NEWEST CONFIGURATION:

HIGH PRESSURE LIQUID1-LIQUID2-GAS SEPARATOR
F-T REACTIONS (GTL), LOOKING FOR RESEARCHERS NEEDS

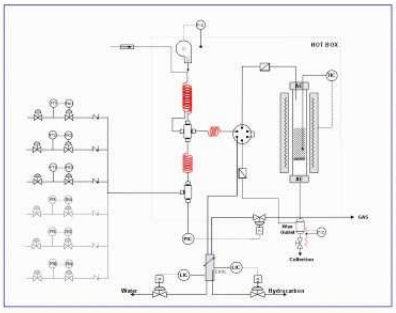

- Liquid1 – Liquid2 – Gas separation in real time without dead volume for application on Fischer-Tropsch reactions (patent pending: P200930603)

OUR PRIMARY
PRODUCT AND SERVICES

CATALYTIC REACTORS

The **MICROACTIVITY-Reference MA**

Is a modular automatic and computerized laboratory reactor for catalytic microactivity reactions with reactor bypass, preheaters, evaporator, pressure control valve and other process layouts inside a hot box, which avoids the possible condensation of volatile products at the time that preheats the reactants efficiently.

The equipment consists of a BASIC UNIT and some series of EXTRA PACKAGES that improve its efficiency.

This Catalytic Reactor is the reference worldwide unit for catalytic studies.

FOUR RUNS MICROACTIVITY-TEST MAT ASTM D3907 MT

This unit is a fully automatic and computerized laboratory reactor (described in ES2011993 patent) for the analysis of Fluid Cracking Catalysts (FCC).

This MAT reactor is design to perform up to four independent and consecutive FCC test, following the norms described by the standard method ASTM D3907, in automatic mode without the presence of an operator.

The operator will be able to adjust for each independent experiment stream time, catalyst/oil relationship, reaction temperature, the regeneration times and temperature, gas flow, and other parameters.

With an excellent reaction temperature control and making use of a precise HPLC pump for gasoil dosification, even for very short reaction time (10 seg), this unit carry out reaction and regeneration in-situ and consecutives stages, with coke and gases analysis. The four liquid products obtained are collected in a cooled receiver until the end of the experiments.

This develop project has been co-financed by European Regional Development Fund (ERDF)

OUR PRIMARY
PRODUCT AND SERVICES

MICROPILOT PLANTS

TAYLOR MADE PILOT PLANTS PP

Improving competitiveness in the industry is sharply marked by developing new products with high quality features and a high added value. Continuous and automatic pilot plants that can simulate industrial processes at the laboratory level with reasonable scalability are essential for seeking new products, improving the quality of existing ones and developing new processes. These systems' high degree of complexity, their high number of operating variables and the interrelationship among them requires an exhaustive study of the instrumentation and control in order to attain results provided by these systems that are representative and reproducible.

CONTINUOUS STIRRED REACTOR

CSTR PILOT PLANT is a plant based on a CSTR reactor and include so many CONFIGURATIONS as user can decide for select his process (MFC´s, pumps, separators,...).

POLYMERIZATION PL

PID Eng&Tech has worked for several years in collaboration with industrial research centers to develop and implement projects for polymerization pilot plants in both discontinuous and **continuous** mode. This has led PID Eng&Tech to a high level of knowledge on the restrictions and demands on these processes and on the technologies related to them.

PID Eng&Tech has its own solutions for operations such as continuous feed regulation of catalysts or transferring slurries, solutions that have been implemented and validated on different scales (patent pending). PID Eng&Tech, a leader in **microscale**, technology, has manufactured the first microscale factory in the world for obtaining bimodal polymers. It operates continuously with a production of 200 g/h.

SUPERCRITICAL EXTRACTION SF

PID Eng&Tech has 4 plant models for SCF with volume extractors between 350cc and 2L in capacity. They operate at a maximum pressure of 380 bar, CO2 flowsup to 5 l/h, and using two separators with independent control temperature and pressure contrl. More than 15 units are currently in operation.

GASIFICATION GS

In the past few years, PID Eng&Tech has built several different laboratory units. They range from the 2" and 1.5 m high ones to the 8" and 4 m ones. They produce synthesis gas through the gasification of biomass, carbon or plastic waste. Accompanying manufactured solids dispenser (patent pending) makes it possible to feed the material to be gasified with high accuracy and even operating with pressurized gasifiers. PID Eng&Tech has also worked in the subsequent phases of reforming, gas-shift, COprox.

THE SOFTWARE

PID Eng&Tech is a leading supplier of Supervisory Control and Data Acquisition (SCADA) solutions for laboratory reactors and pilot plants. Our systems include the Process@ software making use of the Ethernet remote control. The operator is able to set all the devices configuration parameters: set points, alarm values, calibration parameters settings, etc. Process@® can also save sessions that are used in order to automate the processes. The main innovation of Process@® application is its ability to manage different manufacturer protocols.

GASIFICATION PILOT PLANT

Automated and computerized laboratory-pilot plant for study gasification process.

Due to the renewed interest on innovative ways to convert the existing fuel reserves with improved technologies like gasification, PID Eng&Tech has worked in collaboration with important researches in the field of gasification in order to develop the **most versatile** pilot plant existing in the market nowadays. Its versatility and complete automatization, allows the user to determine optimal experimental conditions and detecting possible operational problem in industrial gasifiers.

The most outstanding feature of the plant is its feeding system (pending patent), which has been developed by PID Eng&Tech and can feed up to 1.5 kg/h of different solids and mixtures in an **homogenous**, **constant** and **reproducible** way. The design of the system prevents hot gases from entering in the feeding hopper, which would ruin the experiment.

FEATURES:

Fluidized Reactor

The reactor is divided in reactor zone and freeboard zone. The operating homogeneous temperature is up to 900ºC.

- Reactor zone is Ø = 3" and length = 750 mm. Freeboard zone is Ø = 5" and length = 630 mm.
- The pressure is measured drop inside reactor, for fluidization speed determination.
- Particle removal system is installed to collect char and ashes from bed in continuous during the experiments.
- The radiant type furnace reaches 1000ºC and has two zones to improve the uniform temperature.

Gasifying agent inlets

- Gases streams for fluidize the bed and gasify are preheated up to 600ºC.
- Water is fed by means of an alternative positive displacement pump and vaporized up to 600ºC.

Feeding system

Continuous and non-fluctuation solid feeding system consists of 10 litres hopper and two screw feeders. The solid flow is constant from 0.2 to 1.5 Kg/h.

- A nitrogen flow will continuously flush the dosing screw, promoting the motion of the solids.

Cyclones

- Two cyclones connected in series and heated up to 400ºC, allow removing solid particles from gas stream.

Products treatment

- A SS316 Shell and multitube heat exchanger is used to cool the hot gases and condense tar and steam. A filter allows cleaning product gas.

Scrubbers and gas meter

- As optional, a wet gas scrubber is used to remove contaminants, and a wet gas meter is used to outlet stream measurement.

Control system

- The process variables are controlled by independent PID controllers.
- A Programmable Logic Controller controls the alarms of the plant, launching the corresponding actions in case of failure.
- The software is responsible of process monitorization, data acquisition and registration and experiment automation.

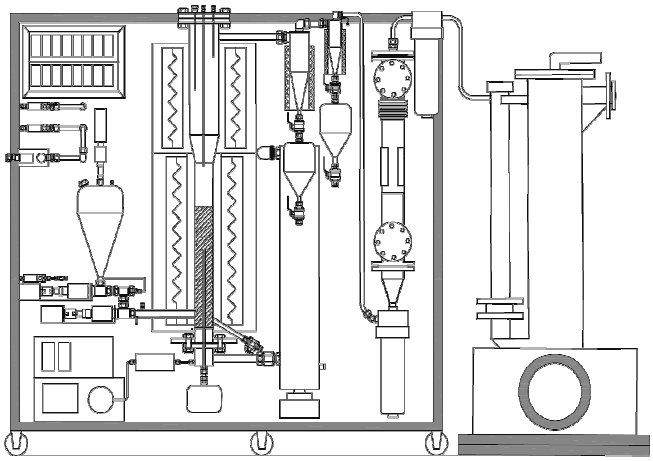

GASIFICATION PILOT PLANT

EXPERIMENTAL CONDITIONS

This system is a very **versatile pilot plant** which allows researching very different feeding and experimental conditions, such as temperature, gas flow in bed, air flow, residence time, pressure, particle size…

EXPERIMENTAL CONDITIONS									
AIR GASIFICATION									
EXPERIMENT:									
FEEDSTOCK									
MASS FLOW (kg/h):	0.5	1.0	1.5	0.5	1.0	1.5	0.5	1.0	1.5
Biomass (%.wt)	100	100	100						
dp (mm)	-0.5+2	-0.5+2	-0.5+2						
Sub-bituminus coal (% wt)				100	100	100			
dp (mm)				-0.5+1	-0.5+1	-0.5+1			
Lignite coal (% wt)							100	100	100
dp (mm)							-0.5+1	-0.5+1	-0.5+1
REACTOR:									
BED:									
Diameter of reactor (bed zone) (inch)	3	3	3	3	3	3	3	3	3
Diameter of reactor (freeboard zone) (inch)	5	5	5	5	5	5	5	5	5
SAND (% wt)	100	100	100	100	100	100	100	100	100
Particle size (sand) (mm)	0.4	0.5	0.7	0.3	0.45	0.5	0.25	0.35	0.45
Fluidized bed height (cm)	21	42	64	17	35	52	13	25	38
Air flow (Nl/min):	15	31	46	15	30	45	7	15	22
ER:	0.4	0.4	0.4	0.4	0.4	0.4	0.4	0.4	0.4
Temperature (ºC)	850	850	850	850	850	850	850	850	850
Pressure (bar)	1	1	1	1	1	1	1	1	1
U_0 (cm/s)	26.5	53	79.6	17.5	35	52.5	12.7	25.5	38
u_0/u_{mf}	3.0	4.0	3.0	3.6	3.2	4.0	3.8	3.9	3.5
τ (s)	0.8	0.8	0.8	1	1	1	1	1	1
Gas flow in bed (l/min)	86	171	257	57	113	170	41	82	123
Gas flow in bed (Nl/min)	28	55	82.5	18	36	54	13	26	40

PROCESS@ SOFTWARE

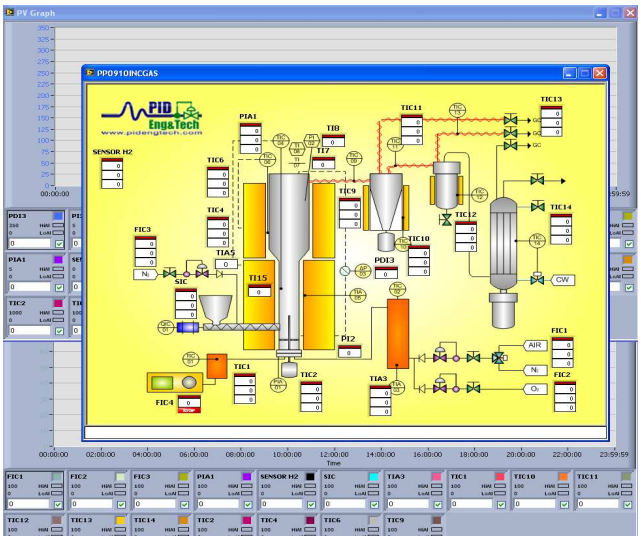

The pilot plant includes process system and electronic control system. All these systems are consisting on a distributed control based on PC that has the Process@ software, based on digital RS-485 communications between controllers and management control system for supervisory control and data acquisition.

All system is operated **automatically** and manually and all displays are fitted on a control panel board.

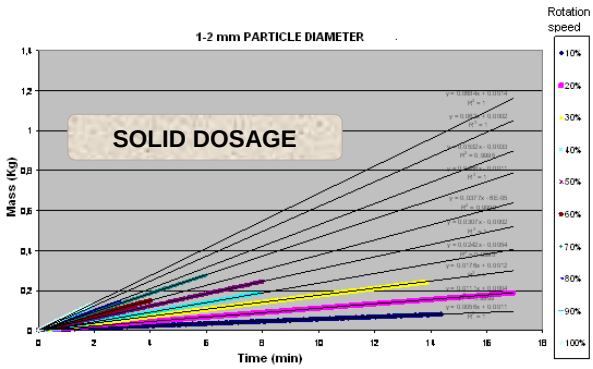

GASIFICATION PILOT PLANT PI DIAGRAM

The plant is fully instrumented and each variable is automatically controlled.

Safety system is supervising the operation of the pilot plant.

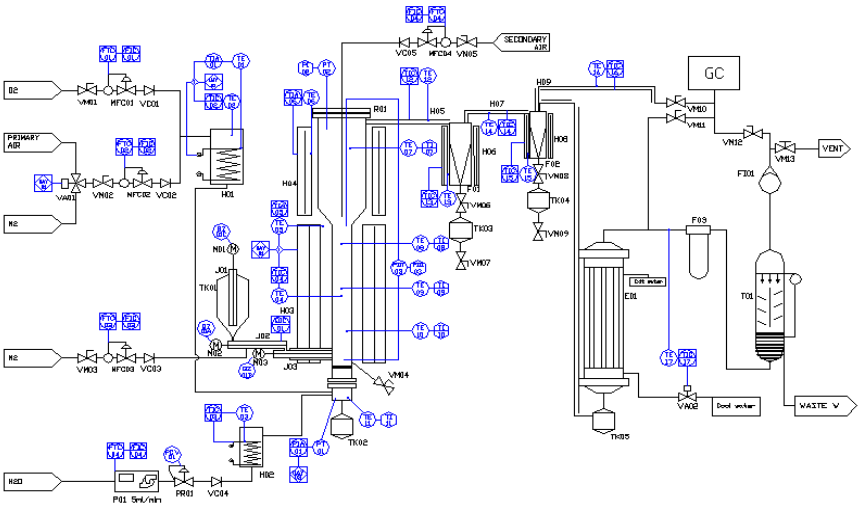

CSTRPP PILOT PLANT

CONTINUOUS STIRRED TANK REACTOR

This "Owner Configured" Computerized and automatic pilot plant is based on a CSTR (from 100cc up to 4L and many different alternatives) and the operation is supported by many optional devices as MFC´s, pumps, pre-heaters, separators, pressure control systems,...
Customer can design his own pilot plant using for it so many options as required for his operation needed, using for it a configuration sheet.
Technology applied is at the top worldwide. Standarized system becomes short production delivery time and confidence on his performances. The Plant will be High Pressure Certified PED/97/23/EC.

MAIN FEATURES

Gases
Until six (n) continuous gases feed lines to reactor. Flow control system by Mass Flow Controllers (Bronkhost High-Tech), including manual valves, check valves, fitting and accessories (P&ID diagram).
Gases line preheating system including temperature control loop can be installed.

Liquids
Up to two liquid feed lines can be installed as standard. Pumps can be selected for micro-flow (HPLC from Gilson) or standard process pumps (Dosapro) for different pressures and flows. Relief valves for calibration, check valves, manometers and usual safety devices will be installed.
Liquid lines preheating/evaporating systems can be selected.
Inertized vessels, tracings and all usual features can be installed.

Stirred Tank Reactor
A stirred tank reactor from Autoclave Engineers, Magnedrive agitator, is the main device of the plant. MOC (SS316, Hastelloy C,…), P@T and volume will be selected by the customer using the configuration sheet.
All safety or operational devices as manometers rupture disk, safety valve and vent valves or sample valves will be included. Also other extra options can be selected. Motor is 3PH but operate with 1PH 220VAC.

The temperature control system for reactor, by electrical oven (220 VAC) and alarm cooling system is included. Reaction temperature is measured inside the reactor through a type K thermocouple. Power control is based on Phase Angle Control (PAC) voltage supply. Overtemperature alarm is also included.

Wax Collector at high pressure
Fisher-Tropsch reactions (GTL) can be conducted at this CSTR pilot plant using the waxes SS316 temperature controlled separator system and an optional switching valve for avoid plugging at the liquid outlet filter. This L/G separator system includes level control based on a differential pressure meter and liquid outlet control valve, also includes heating tracing lines. Also weight scale can be selected on the configuration sheet for real time acquisition on computer.

The Two Liquid phases–Gas Separator at high pressure
A SS316 liquid1-liquid2-gas patented separator system with no dead volume, allows L/G separation even when water and hydrocarbons are obtained simultaneously at reactor outlet. Level dead volume is nearly 1cc for each liquid phase, which implies real time liquid outlet, no accumulation. Level control system includes liquid outlet control valve for each liquid outlet. Two models (L/G or L/L/G) can be selected by the user. Type of temperature control also can be selected. One or two weight scales for real time acquisition on computer can be selected.
Pressure control system for the reactor or , when a fractionation is needed, two different pressure controllers for reactor and separators can be selected. Pressure control is based on the patented PID Eng&Tech microregulation servocontrolled valve (at this brochure). Overpressure interlocks with feeding and oven are installed.

Computer System
Control system based on distributed PID controllers and remote computerized supervision and automation (for process recipes).
PC and Process@ software is included. Engineering and documentation is shared with Microactivity reactor, 15 years worldwide experienced.

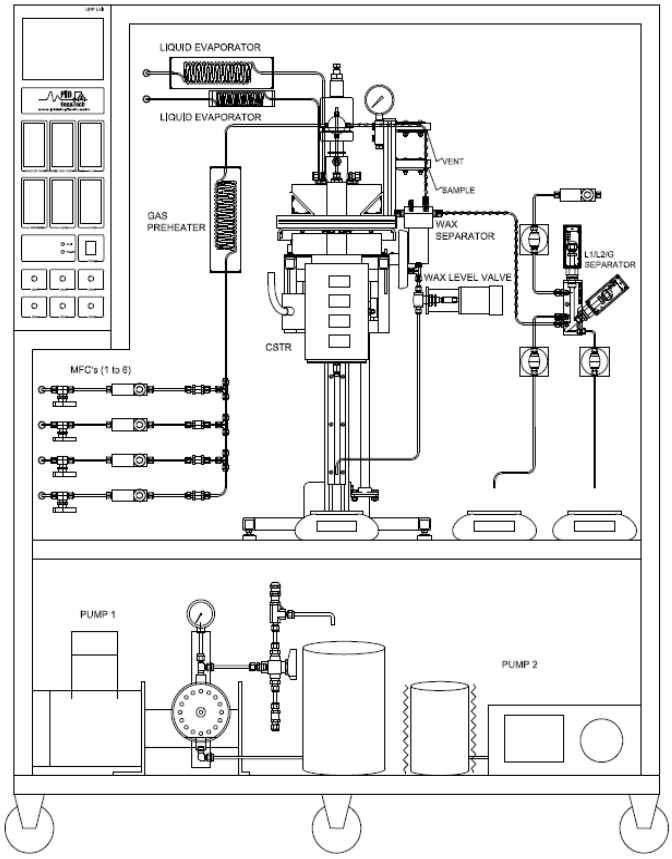

CSTRPP PILOT PLANT

CONTINUOUS STIRRED TANK REACTOR BASED PILOT PLANT

CONFIGURATION SHEET

PED/97/23/EC High Pressure Certification	W. Temperature	W. Pressure	GASES	Number of Mass Flow Controllers	Type of MFC´s	Gas Preheater	LIQUID FEED 1	Type of pump	Evaporator	LIQUID FEED 2	Type of pump	Evaporator	HIGH PRESS STIRRED REACTOR	Type of valve	Reactor Volume	Type of Autoclave	Lift mecanism	Material	Seal (gasket)	Cooling	WAXES SEPARATOR	Wax collector	Scale	LIQUIDS H.P. SEPARATOR	Liquid separator	Temp. Control	Scales	Presurre control	Meter
CSTRPP	T	P	G	n	MFC	PH	L1	F1	E1	L2	F2	E2	CSTR	VLV	V	AE	LM	M	G	C	S1	W	WW	S2	S	TC1	W1	PC	F

Work temperature

Work pressure

Number of gases (MFC´s) **0 to 6**

0- without gas preheater
1- with gas preheater

0- without evaporator
1- with evaporator

0- without evaporator
1- with evaporator

Type of valve
0- without valve
P- inlet switching valve
B- reactor by-pass valve

Manual elevator
0- None
1- Manual Screw jack

Cooling
0- none
1- refrigeration coil

0- Without wax collector
1-With wax collector

0- without separator
1- with L/G separator
2- with 2L/G separator

0-Without scale
1-With scale
2-With two scales

0- without meter
1-with meter

Type of MFC´s
S-Standard (up to 100bar)
V-VaryP (up to 400bar)

Type of pump
0 - no pump
G005- Gilson 5 cc/m 600 bar
G010- Gilson 10 cc/m 600 bar
G025- Gilson 25 cc/m 280 bar
D040- Dosapro 40 cc/m 480 bar
D095- Dosapro 95 cc/m 390 bar
D170- Dosapro 170 cc/m 200 bar

CSTR Volume
010- 100ml Ø=46mm; L=70mm
030- 300ml Ø=46mm; L=170mm
050- 500ml Ø=76mm; L=116mm
100- 1 Liter Ø=76mm; L=221mm
200- 2 Liter Ø=127mm; L=152mm
400- 4 Liter Ø=127mm; L=312mm
Others to consult

SS-SS316
HC- Hast C
IN- Inconel

Seal (gasket)
A- Metal (not ZipeerClave)
B- BunaN
C- Ethilene-Prop
D- PTFE
E- Viton
G- Kalrez

0-Without scale
1-With scale

0- without Temp control
1- T. Control 25 / 65ºC
2- T. Control (-5)/65ºC

0-No pressure control
1-In the CSTR
2-In the CSTR & S1

Autoclave Type
ZC- ZipperClave (151 bar@232ºC)
ES- Eze-Seal (227 bar@454ºC)
BC- Bolted Closure (400 bar@343ºC)
BT- Bolted Closure HT (350 bar@510ºC)
SP- Special executions

Standard Volumes
ZipperClave (fast closure) only 050,100,200 &400
Eze-Seal all the volumes
Bolted Closure all the volumes
Bolted Closure HT only 030, 100.
Max Temp is function of sealing elastomer MOC

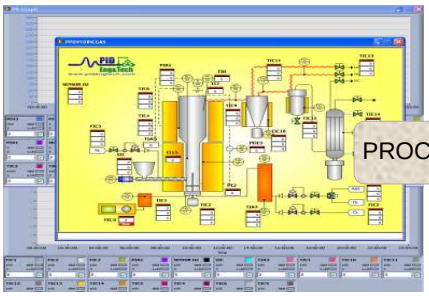

PROCESS@ SOFTWARE

CONFIGURATION SHEET

CSTR PILOT PLANT P&I DIAGRAM

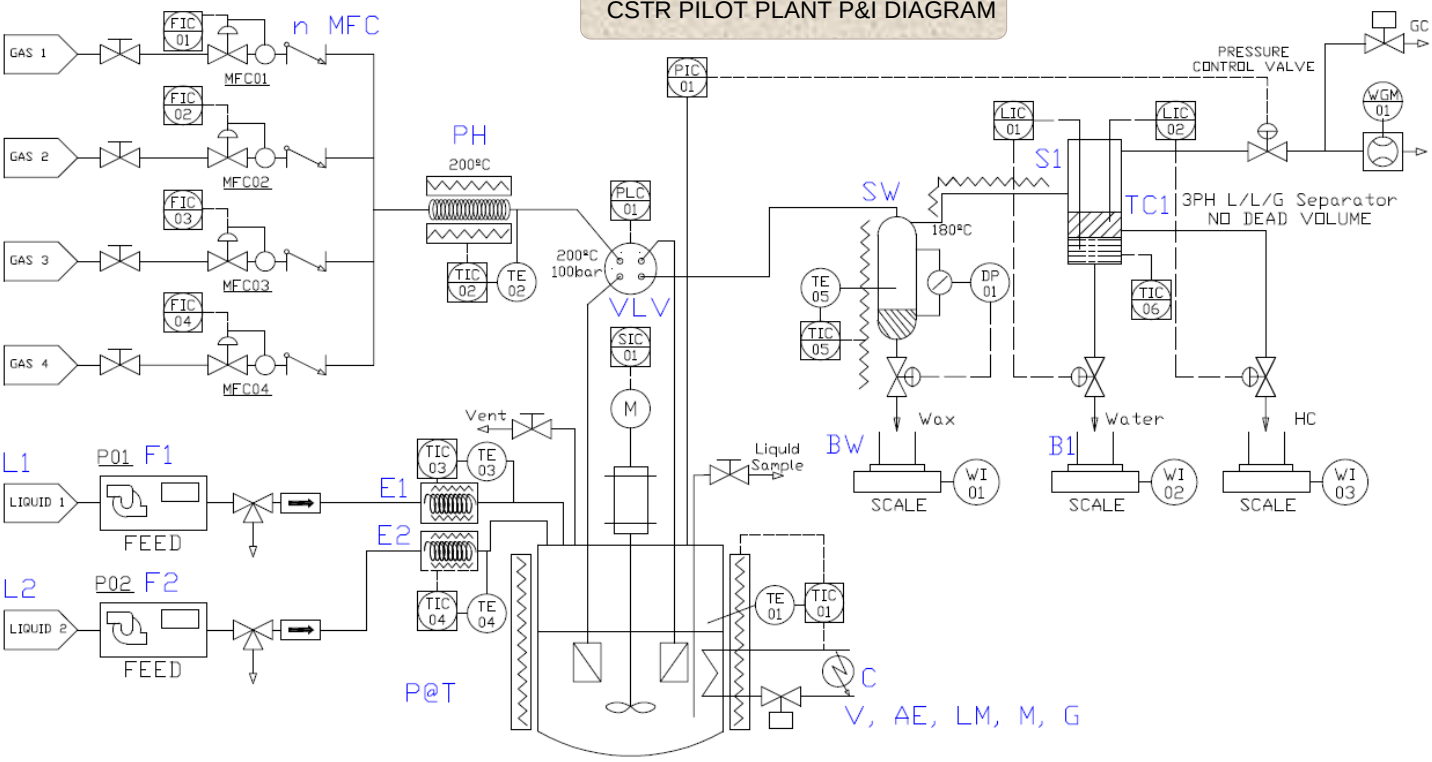

FOUR RUNS MICROACTIVITY TEST MAT-ASTM D3907

*The **FOUR RUNS MICROACTIVITY Test Unit MAT ASTM D3907** is a fully automatic and computerized laboratory reactor for the analysis of fluid cracking catalysts (FCC). This MAT reactor is design to perform up to four FCC test in automatic mode. The system has been prepared to carry out FCC test following the norms described by the standard method ASTM D3907.*

*The **MAT unit** has been design to perform continuous control up to **four independent and consecutives FCC tests**. The operator will be able to adjust for each independent experiment stream time, catalyst/oil relationship, reaction temperature, the regeneration times and temperature, gas flow, and other parameters. Otherwise the operator can decided to run the experiments in fixed and normalized conditions as described in **ASTM D3907 norm**. The instrumentation and process control installation, is based on a distributed control by means of programmable logic controllers for the automatic management of the system and experimental data. The system has local control and on-line remote control, based on TCP/IP **Ethernet** communications with distributed control structure.*

BASIC UNIT FEATURES:

Gas feedstock system

- MFC (100 ml/min) for stripping with N_2 and catalyst regeneration with O_2
- 3 way valve for gas selection plus check valve.

Liquid feedstock system

- 100 cc 316 stainless steel heated vessel.
- HPLC liquid pump, all tubing heated.
- Back pressure for repetitive pump work and pulse elimination.

Reactor feed system

- Pneumatically actuated stainless steel heated valve by VICI VALCO, with zero dead volume. This valve leads fluid into the reactor or outside through the purge.
- Stainless steel reactor head with inputs for two thermocouples, a pressure sensor and the feedstock.
- Pneumatically actuated stainless steel heated valve by VICI VALCO, with zero dead volume. This valve leads fluid into the reactor or outside through the purge.
- Stainless steel reactor head with inputs for two thermocouples, a pressure sensor and the feedstock.

Reaction system

- Quartz tubular reactor similar to described in Standard Method for Testing Fluid Cracking Catalysts by MAT ASTM D3907.
- 316 Stainless steel solid rod with a drilling of 1 mm, inside the reactor, for oil preheater.
- Radiant heater placed on the top of the reactor for preheating. Radiant heater placed on the bottom of the reactor to control the reaction temperature. Both have very low thermal gradient and very high response.
- Pressure sensor.
- Two K-type thermocouples; one for the preheater temperature and the other placed inside the catalyst bed in order to measure the reaction temperature.

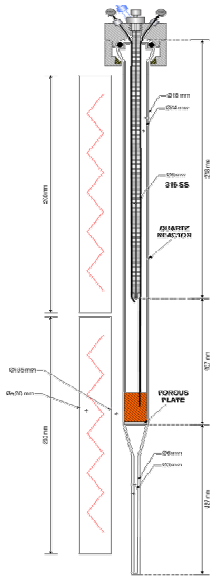

FOUR RUNS MICROACTIVITY TEST MAT-ASTM D3907

Liquid sampling system

- Pneumatically actuated stainless steel valve by VICI VALCO, with zero dead volume. This valve has 6 ports connected to: four liquid sample tubes, CO_2 and water measurement line (for the regeneration process), and vent.
- Stainless steel distribution system with easy sample tubes fix.
- One check valve placed after the distribution system to connect it with the burette.
- Four glass tubes for sampling.
- Refrigeration system based on a stainless steel tank and a Peltier cell.
- It has a pneumatic system in order to place the cooling system over the tubes, for condensing the liquid fraction.

Gas sampling system

- Liquid centrifugal pump to fill the burette.
- Burette for the gas collection.
- Three level sensors (L1, L2 and L3) to measure the volume of the burette with automation purposes.
- Two electro-valves for leading the gases towards chromatographer or vent burette.
- Automatic injection of two gas samples in GC, with synchronism signal for GC.
- Pneumatic actuator for homogenization of gas sample in burette before injection.

Regeneration and CO_2 - H_2O quantification system

- Regeneration in situ (quartz reactor) at high temperature.
- Copper catalytic reactor for CO oxidation to CO_2 at 600ºC in CO_2 and water line.
- CO_2 infrared analyzer for coke quantification.

Control System

- TFT touch screen process set-up. Siemens.
- PLC (Programmable Logic Controller). Siemens.
- Digital controllers.
- PC remote control by Ethernet.

P&ID MAT ASTM D3907

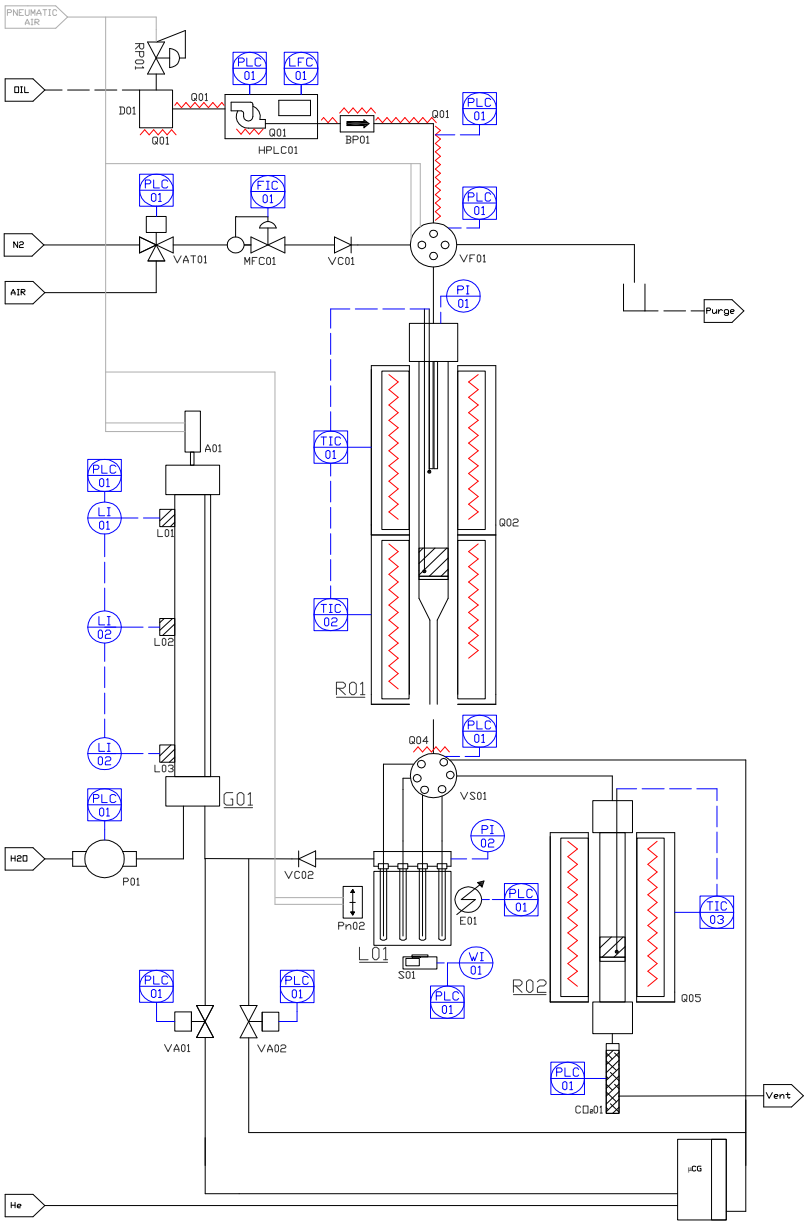

CONTINUOUS POLYMERIZATION MICROPLANT

Automated and computerized laboratory-pilot plant for the study of polymers production

The Polymerization Micro-Pilot Plant, developed by PID Eng&Tech, is designed for continuous polyolefins production at microscale.

PID Eng&Tech in co-operation with important Research and Technology Centres (ICP-CSIC and URJC) by means of different Collaboration Projects has developed this pilot plant that comprises two liters continuous stirred-tank reactors that operate in series.

This Micro-Pilot Plant is fully automatized and all of the process parameters, as the solvent, comonomer, operating pressure and temperature, residence time per reactor, etc., can be selected by user, or modified in a wide range.

PID Eng&Tech's computerized process control systems allow a direct control of temperature, level, pressure and gas composition in the reactors.

The devices for polymer slurry driving between the different reaction steps and for solid addition have been studied in depth. These developed mechanisms have been designed for performing the process in microscale and is patent pending.

The catalyst is continuously added into the first reactor. PID Eng&Tech has developed in collaboration with ICP (Catalyst and Petrochemical Institute of CSIC, Spain), a system, based in loops and actuated valves, patent pending that allows to load it continuously.

FEATURES:

Feed and conditioning of gas and liquid feed stocks

- Five gas lines: two independent ethylene feed streams (0-4 l/min), one for each reactor; one hydrogen stream (0-500 ml/min); one 1-butene stream (0-50 ml/min); and one nitrogen line for inertization purposes.
- Two solvent (heptane) lines; a common stream is divided in two, feeding at real time with a H.P. Dosapro Milon-Roy pump (5-10 ml/min), one for each reactor.
- A catalyst line; catalyst is added like a slurry in heptane into first reactor;
- A cocatalyst line; cocatalyst (e.g. TIBA) homogeneous solution in heptane is added to first reactor using a HPLC pump.

Reactors and flashes

- The plant comprises three SS316 stirred tanks (1 or 2 l) with high pressure closure system. The 1st reactor works at 8 bar @ 80ºC, 1st flash, at P atm @ 40 ºC and 2nd reactor, at 2.5 bar @ 80ºC.
- Each one is provided with a magnetically coupled stirred head, a heating jacket, cooling coil, valves and accessories. Stirrer speed is controlled by Inverter.
- In addition to temperature and pressure control, the ethylene/hydrogen, or the ethylene/butane, composition relations are measure continuously, near-real time.
- In this way, the integrated control pressure/relation loop allows the user to work holding simultaneously a stable desired pressure and a stable desired hydrogen/ethylene (at the first reactor) and butene/ethylene (at the second reactor) relations during the reaction time.

Distributed control system

All the process variables are controlled by distributed PID controllers. The control system modules are linked with PC by means of a Process@ software for remote control by digital communications. The system can be controlled manually or automatically, locally or remotely.
All the process and control variables and parameters are registered in only one software application. In addition, software allows the operator to design automatic procedures for design and automate the run.

Security system

Plant has several independent safety levels: automatic switch off in case of any problem, pressure, level and temperature security systems; all of that based on a Programmable logic controller (PLC) device independent of PC. PLC manages the alarm signals from controllers. In addition, actuated valves are configured according to good safety practices.

CONTINUOUS POLYMERIZATION

POLYMERIZATION MICROPLANT PI DIAGRAM

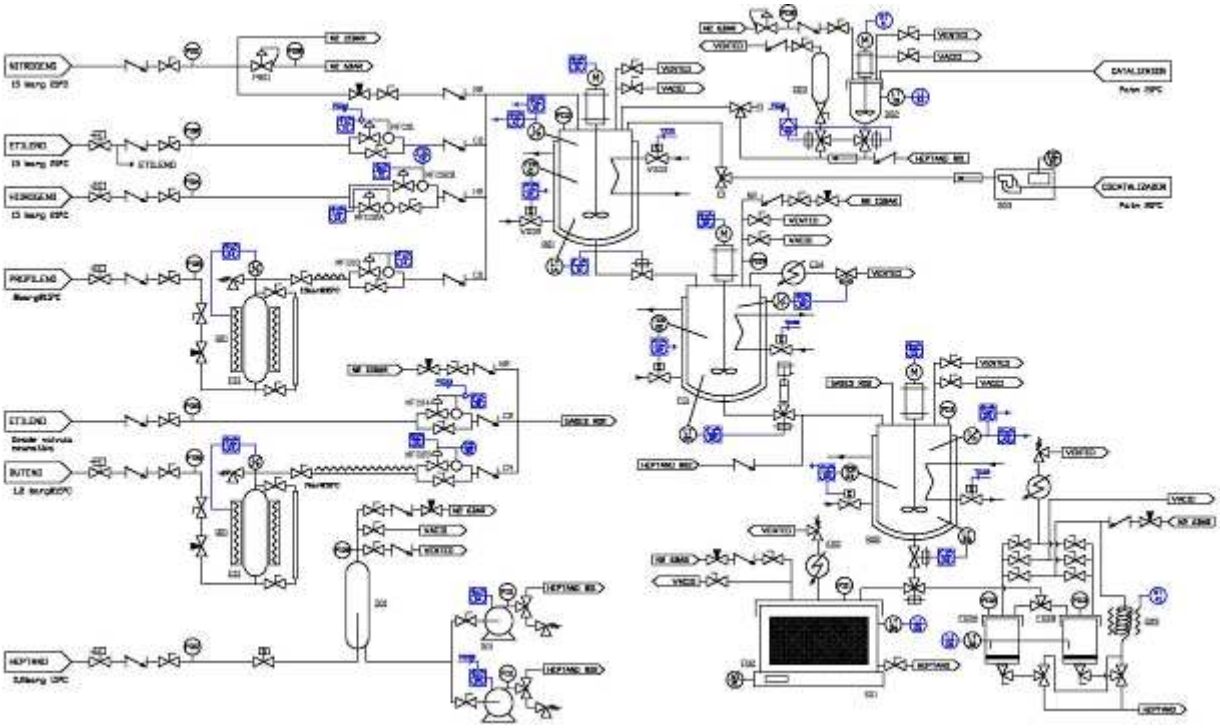

PROCESS@ SOFTWARE

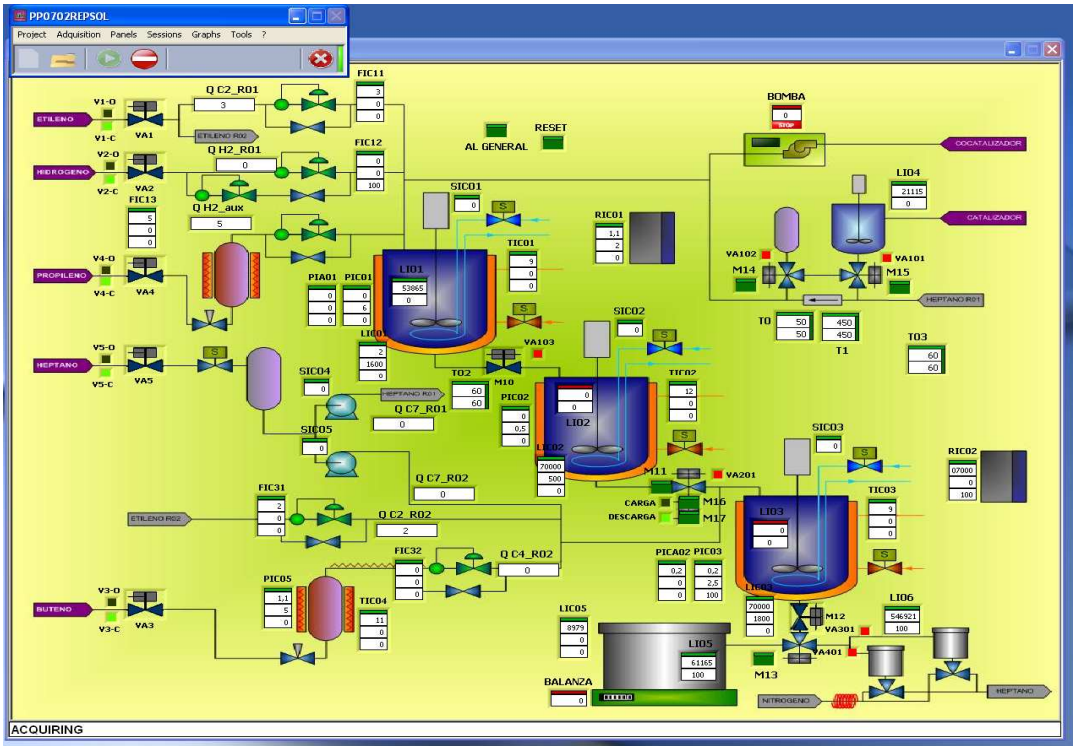

SUPERCRITICAL EXTRACTION PILOT PLANT. SFF model

Automated and computerized laboratory-pilot plant for extraction of solid samples by means of supercritical CO2.

The system is a modular-type built for easy return to factory for service. Each module (feed section, Extractor module and two Separator modules) includes process system and electronic control system.

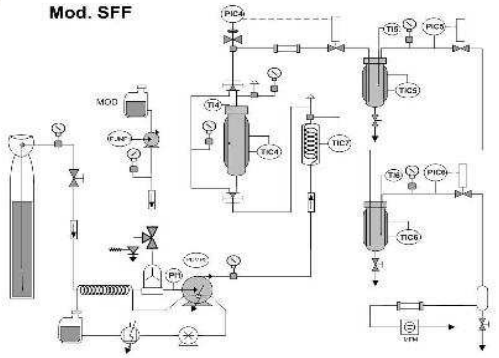

Feed system

- Dosapro Milton Roy CO2 pump, 4.7 l/h, 380 bar, SS-316 hydraulic membrane, refrigerated head. Inverter for computerized control. Check-valves, filters and other components.
- Refrigerator unit (-10ºC) for cooling CO2 line feed and CO2 pump head.
- Dosapro Milton Roy Co-solvent pump 0.3 l/h, 100 bar, SS-316 piston head. Inverter for computerized control.
- Back pressure system and bypass for flow measures at high pressure in Co-solvent pump.

Column System

- Furnace for CO_2 preheater. Two control actions: heating by electrical power and cooling by furnace opening and closing.
- 350 cc Head Line vessel, 400 bar, easy closure system, for solid sample. Porous plate 20 microns. Quick connectors for agreeable work.
- Furnace for control temperature of extraction operation, internal thermocouple. Two control actions: heating by electrical power and cooling by furnace opening and closing.
- Bypass system (two-three way valves) for cleaning procedures.
- Pneumatic security valve put into operation by pressure control system.
- Pressure control system based on micrometric regulation servocontrolled valve. High precision in pressure control and fast response. Maximum pressure 340 bar.
- Rupture discs, check valves, filters and other components.

Three Separators

- 40 cc Head Line vessel, 400 bar, easy closure system, for extracts collection. Valve for sample.
- Furnace for control temperature of separation operation, internal thermocouple. Two control actions: heating by electrical power and cooling by furnace opening and closing.
- Pressure control system based on micrometric regulation servocontrolled valve. High precision in pressure control and fast response. Max pressure 220 bar in Separator 1, 120 bar in Separator 2.
- Separator 3 at atmospheric pressure and MFM for CO_2 flow measurement.

Distributed control system

- All module control systems are linked with PC computer by means of Process@ software for remote control with digital communications. The system can be controlled manually or automatically.
- Process@ software allows the operator to design automatic procedures for the process run.
- Plant has several independent safety levels: automatic switch-off in case of any problem, pressure and temperature security systems, all that based on electronic or mechanical devices and independent of PC.

Test

- The system will be tested during 24 hours at 360 bar closing (except MFM and rupture discs).
- The system will be tested during 4 hours at 340 bar in Extractor, 220 bar in Separator 1 and 120 bar in Separator 2, in operation mode, with 3 l/h CO_2 and 20 cc/h ethanol as co-solvent.

CUSTOMIZED PILOT PLANT

PID Eng&Tech was born as a spin-off company with more than 20 years of accumulated experience and has devoted its activity to the technologies development dedicated to the construction and operation mode of laboratory-scale reactors and micro-scale pilot plants, and their data acquisition, supervisory and control systems. The main areas of PID are: petrochemistry, chemistry, agrochemistry, catalysis and new energies.

The staff that worked for the Process Control Group, formed by experts with multidisciplinary backgrounds in chemical engineering, electronics, automated and software engineering, set up in 2003, in the Scientific Park of Madrid, the company Process Integral Development Eng&Tech, where the experience, technological development and innovations achieved by the group over many years of work in the field of engineering had been put into practice.

LAB-SCALE PILOT PLANTS

The objective of the PID Eng&Tech Company is, therefore, to design and prepare standard equipment to carry out common operation steps of pilot plant reactors used to study different chemical processes and, thus, to build such pilot plant reactors using modular components with the aim of diminishing at least one factor of 2 existing: construction time and cost. The design will include the latest advances in process control technology.

PID Eng&Tech also offers the possibility of installing improved automated control systems for pilot plants already in operation.

Twenty years of experience and know-how back the company in the design, development and construction of several types of pilot plants. Especially we have a huge experience using MFC's, high pressure systems (400bars), special alloys (Hastelloy®, Inconel®, Monel®, etc.), pressure control systems, separation systems of pressurized liquid-gas mixtures, supervisory control and data acquisition by PC, etc. The whole lot of equipments, reactors and plants are delivered "turn-key", checked and commissioned. We always provide a user's handbook and practical training.

The incorporation to the market of new instrumentation (smart instrumentation, field communications, automation of chromatographic techniques, low cost time-sharing computers, new materials ...) has made possible to think of a computerized process control system designed to control discrete operations common to many processes that are studied at pilot plant level, in such a way, that single designs can be used for many different processes.

Our automated control systems for laboratory reactors and pilot plants have many advantages when compared to other systems. Some of them include size and easy scale-up. One of the advantages of our units is that you can start "small" and later scale-up the system as your requirements grow.

Putting together a system in this way keeps your initial cost low, yet provides you with the ability to add instruments and equipments at any time in the future. Lastly, as you build and expand your system, the initial cost of the unit decreases. With a 19" industrial rack, however, you can place the system in almost any location. Other enclosures are also available to provide the system with additional protection.

Our automated control systems include the Process@® software for supervisory control and data acquisition. Process@® software is based on digital RS-485 communications between controllers and management control system. The communication with the computer is managed by means of the Ethernet, TCP/IP protocol.

The micro-regulation Pressure Control valve

Patent WO-2006021603 / EP-1775504 / US-2007241296

The **micro-regulation servo positioned valve** used by PID Eng&Tech in the Microactivity-Reference reactor and pilot plants, for pressure control or for Liquid-Gas separator Level control, are based in our patent **(WO-2006021603 / EP-1775504 / US-2007241296).** This patent describes a servo-controlled valve with 8 turns of rotational movement and with a high speed and resolution that leads to the highest sensibility in flow modulation and fast response, comparing with the currently state of art worldwide.

The principal advantages using this system, for control micro-flows (laboratory plant scale) at high pressure, are the **stability**, the high **rangeability** and the **universality** of the design.

Standard commercial control valves are based on pneumatic valves, mechanical orifice-diaphragm valves or electronic devices. Each one of these systems has a big limitation when they are used at microflows & high pressure. Pneumatic valves have very low rangeability and the flow modulation is based on the change in restriction length, and not on the change in modulated orifice size. The mechanical valves are not designed for microflows because Kv and spring action lead to non-stable flows, also big dead volume is problematic with condensed liquids. Finally, electronic valves are not appropriated for use with dirty reaction products or products with vapors. In order to solve all these problems PID Eng&Tech has designed and patented its own control valve for microflows control, opening a new operational window in research scale equipment.

Stability:

Generally, the pressure in a system is controlled modulating the flow at the gas outlet. In this way, perturbations caused by pressure control valve action will be transmitted to catalytic bed generating a pulsing flow through the bed that modifies the obtained results because of the instantaneous modifications on the time on stream. The use of the PID Eng&Tech patented control system will reduce this effect over the experimental results, increasing the experimental repeatability. If compare the resolution of a pneumatic valve (with around 100 different control positions) with the servopositioned PID Eng&Tech valve (1° resolution above 360° per 8 turns), the increasing of sensibility is very important.

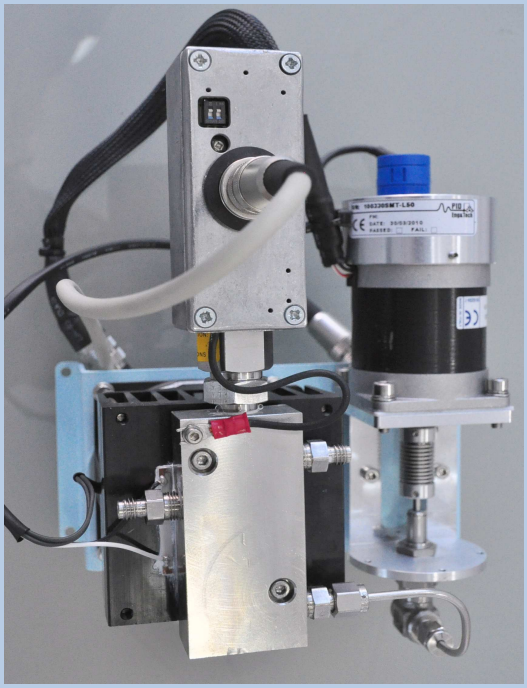

Rangeability:

The orifice of the control valve in the PID Eng&Tech's design is made of non-metallic material. That system allows the total sealing between the SS316 valve needle and the seat of the orifice and to control near to the close position, without damaging of the valve needle. Therefore this valve can be used for controlling micro-flows, very high pressure flows, or both simultaneously reaching very low Kv values. The material used for the orifice-trim (confidential) was developed specifically for use in this valve and the life of the valve will extend during several years of continuous work (24h/7days) at very low flows and high pressures. Since flow is modulating the orifice size, also high flows or very low pressures can be controlled with the same valve.

Universality:

The valve has been tested during years for many different operation conditions. As result its operating has been tested for high pressure or low pressure, for high flows or very low flows, for gases, liquids or mixtures, and in a temperature range from ambient temperature to **220°C**. This universality in its use is one of the principal advantages of this PID Eng&Tech patented system and gives to our equipments a big added value due to the system do not need to be designed for some determinate operation conditions, and it can be used in many different type of working conditions. For these reasons PID Eng&Tech patented system is the ***Universal multipurpose control valve.***

Operability:

Because of its simple design, user can easily carry out the maintenance of the valve, configure it for different uses (sensibility can be adjusted modifying the turns number), with very easy re-zero position adjust, very easy cleaning operations, cheaper spare parts sets and simple disassembling operations,…, finally it is a dream for the pilot plant users.

Technical datas

Work temperature from 0°C to 210°C
Work Pressure from atmospheric to 340 bar.
Chemical compatibility MOC: SS316, Teflon, Peek
Cv from close sealing position up to 10exp-3
CE marked

Capacitive micro-level sensor

Patent WO-2006021604 / EP-1757911 / US-2007238753

Micro-level measurement State of the art

Users of laboratory reactors or micro pilot plants working at high pressure usually face up to a big problem when the reactions products, liquid and gas mixture, need to be separated before the outlet of the system. The liquid level inside the L/G separator needs to be measured in real time for controlling the liquid outlet of the separator.

The current technologies applied at these systems are based in differential pressure transmitters that measure the hydrostatic pressure of the liquid column in the vessel. According to this value, a control valve is positioned for maintaining a stable liquid level. Because of the low sensibility of these differential pressure transmitters together with their big size, it is needed a minimum amount of liquid inside the separator, (usually more than 100cc). These use of this volumes involve two important problems; first, user can never obtain liquid samples on the first stages of the reaction (some hours are needed to achieve the operational minimum level); and second, the liquid samples obtained at outlet of L/G separator is the mixture of the products corresponding to many reaction hours. Under these conditions, phenomena such us kinetic of the reaction or catalyst deactivation cannot be studied.

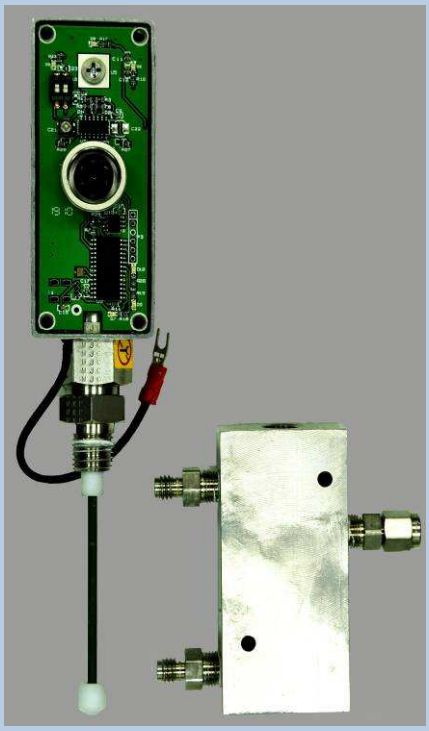

PID Eng&Tech new capacitive liquid sensor

PID Eng &Tech has devoted many years of effort to improve a micro-volume high pressure level sensor based on dielectric property of liquids. Electrical capacity of a condenser is modified when a liquid or dielectric is placed between its plates. Therefore, an oscillating RC circuit increases its oscillating frequency when there is more amount of dielectric between the condenser plates. This principle has been used for measuring the amount of liquid present inside a SS316 8mm I.D. vessel (housing) with an internal rod of 3 mm O.D., acting these both elements like a electrical condenser. These two components need to be electrically isolated, but the closure between them is designed for high pressure (400 bar). Finally, the dead volume of this system is around 0.5 to 1 cc, hundred of times less comparing with standard L/G separators.

Sensor response sensibility

The response of the sensor depends on the dielectric capacity of liquid. Therefore, water (€=80) will be detected with very more sensibility than hydrocarbons (€=1.8). The response of the sensor for different types of liquids and different amounts of liquids (from 0.5 to 2cc) inside the L/G separator is shown in table and graphic:

COMPOUND	FÓRMULA	ε (20ºC)	BASE	0.5 cc	1 cc	1.5 cc	2 cc	DIF
Hexane	C_6H_{14}	1,89	30923	31118	31314	31516	31710	787
Heptane	C_7H	1,92	30930	31115	31330	31540	31730	800
Hexadecane	C_6H_{34}	2,05	30960	31198	31438	31679	31914	954
Hydraulic oil			30970	31225	31522	31815	32062	1092
Mecanic oil			30988	31280	31595	31897	32170	1182
Carbon tetrachloride	CCl_4	2,24	30955	31225	31512	31790	32060	1105
Toluene	C_7H_8	2,379	30935	31245	31590	31923	32244	1390
Vegetal oil			30985	31435	31922	32403	32808	1823
Acetic acid	$C_2H_4O_2$	6,17	30940	32005	32260	34511	35512	4572
Dichloromethane	CH_2Cl_2	9,08	30920	32503	34191	36000	37715	6795
1,2-Dichloroethane	$C_2H_4Cl_2$	10,42	30918	32790	34945	37128	38900	7982
Isopropanol	C_3H_8O	20,18	30945	34645	38808	43000	46525	15580
Ethanol	C_2H_6O	25,3	30920	35710	40800	46060	50275	19355
Methanol	CH_4O	30	31632	37800	45200	51452	56210	24578
Glycerol	$C_3H_8O_3$	44.52	31377	40840	49470	57786	65835	34458
Deionized water	H_2O	80,1	31000	45810	63020	78745	93420	62420
Drinking water	H_2O		31000	51015	77665	109800	145700	114700

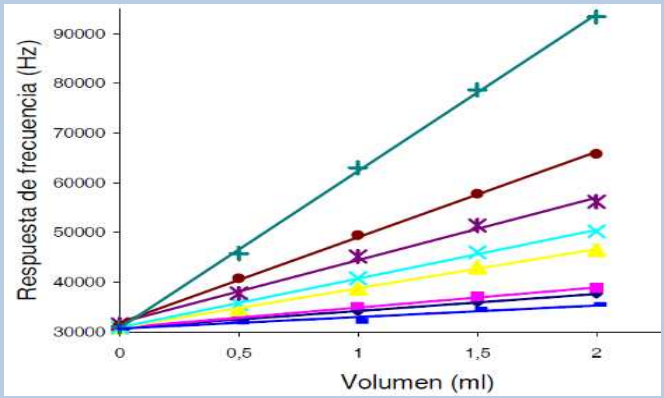

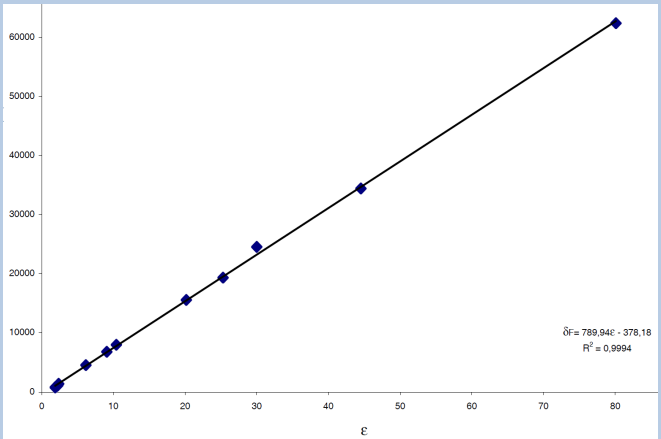

Calibrating the sensor

A clear advantage of this capacitive sensor is that response of the sensor is directly proportional to the dielectric constant of the liquid inside. This effect is showed at the graphic placed on the left side. It can be observed the response of the sensor obtained for the same amount (2cc) of different liquids represented as function of his dielectrical capacity. This linear response allows to determinate the response of a calibrated sensor when the liquid is modifiedd. Therefore, the new liquid response can be adjusted directly from the quotient of the dielectric constants of both liquids.

Technical data

Work temperature: from 0°C to 60°C, stable
Work Pressure: from atmospheric to 400 bar.
Chemical compatibility MOC: SS316, Kalrez, Peek
Sensibility with water: recognize changes in 0.1 mm high.
CE marked

The high pressure Liquid-Gas separator no dead-volume

Patent WO-2006021604 / EP-1757911 / US-2007238753

The **Liquid-Gas separator at high pressure without dead-volume** is one of the principal advantages of the Microactivity-Reference reactor. Traditionally the standard volumes at the L/G separators in micro-reactors have been the same used at big pilot plants, because the measurement of the level inside of the separator involves the use of differential pressure elements with low precision (zero stability) when working at high pressure. Usually the volume of these vessels is so big that appear two main problems: First it is needed too much time for starting to obtain liquid products from the reactor (and so, the analysis of reaction condensed products cannot be did during the first hours); and second, liquid products from the liquid outlet are a product mixture of some hours of operation.

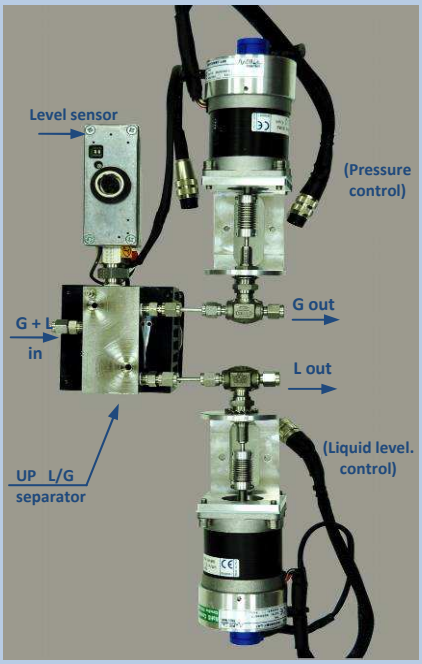

PID Eng&Tech has been working during years for achieving a patented L/G separator at high pressure without **dead volume**. This system allows user to obtain liquid products since the first minutes of reaction and to obtain the products produced in the reactor just few minutes before. This system permits to obtain, first time worldwide, kinetics data's in high pressure reactions involving liquid products.

The level sensor is based on the **dielectric behavior of the liquids** (water, alcohols, hydrocarbons,…) when they are inside a micro vessel and how they modify the capacity of a condenser. A microprocessor evaluates the change in the high oscillation frequency of a RC circuit that is directly proportional to the changes in the capacity of the system, and so, proportional to the level inside the micro-vessel. Due to high sensibility of the system, changes in the level of **0.1mm** can be detected.

The system consist of a SS316 cooling condenser of 1 to 3cc of internal volume, with temperature control system if needed (from 0 to 65ºC), based on a Peltier electrical cell for cooling (avoiding the use of chillers). It works simultaneously like the condenser for the condensable products, as the L/G separator and as the sensor.

The L/G separator has one inlet (gases and condensable products) and two outlets: the gases outlet at top (that usually is directed to the pressure control system), and the liquid outlet at bottom. Two patented micro-regulation valves servo-controlled are used for control the gas outlet (pressure of the system) and the liquid outlet (control the liquid level inside the L/G separator). Because of the fast response of these valves and their precision in the flow modulation, it is possible to work with less of 1cc of liquid inside the L/G separator, only the minimum volume for maintain the hydrostatic sealing inside the separator, even when the pressure can be 400 bar. This system opens a new way of catalysis studies in high pressure reactions when kinetics and catalyst deactivation are involved.

The Two Liquid phases – Gas High Pressure Separator

Patent P200930603, Patent Pending PCT/ES2010-070559 for WO/EP/US

The **Two Liquid Phases-Gas Separator at high pressure without dead-volume** is one of the most recent contributions of PID Eng&Tech and ICP-CSIC to the advance in micro-scale catalytic reactions control. In the last years, there is a significant the increase in the study of **Fisher-Tropsch** reactions **(GTL)**. In these processes, water together hydrocarbons products are present in reactors outlet, as consequence of the reaction stoichiometry. In this type of reactions, where water and liquid hydrocarbons are mixed, two liquid phases appears in the liquid-gas separator because of the **non-miscibility** of both phases.

A modification of our patented system for *one liquid phase – gas* separator has been developed for solving this application, obtaining from the L/G separator 3 streams simultaneously: liquid 1 outlet (water), liquid 2 outlet (hydrocarbon) and gas outlet.. The same patented level sensor and micro-regulation valves are used for control the internal levels of water and hydrocarbon at the same time, with very low dead volume. The system is composed by two level sensors, two valves (one for each liquid outlet) and a third valve for gas outlet (usually, the pressure control valve).

The Two Liquid Phases-Gas Separator can work at 400 bar, from 0 to 65ºC and the precision in control can be adjusted, for each one of the liquid phases, with volume inside the separator of **1cc +/-0.3cc**. Since condensation of liquid products occurs at high pressure, and the residence time is too short, equilibrium is not reached, so separation of products is really effective.

This type of system can also be used in reactions where a few amount of water is obtained or mixed with the reaction products and liquid hydrocarbons need to be separated at real time for online analysis by chromatography. This is also a new open door for the automation possibilities for High Throughput Reaction Systems.
These patented products are property of PID Eng&Tech and are not provided as spare products, only like part of the PID Eng&Tech equipments.

ACCREDITATIONS/CERTIFICATIONS

ISO 9001 : 2008
ISO 14001 : 2004

European Directives

PED - Directive 97/23/EC

Our equipments meet the Directive 97/23/EC of the European Parliament and of the Council of 29 May 1997 on the approximation of the laws of the Member States concerning **High High Pressure Equipments**.

Equip Cat	Assess Modul	CONFORMITY ASSESSMENT PROCEDURES
I	A	Internal production control
II	A1	Internal manufacturing checks with monitoring of the final assessment
III	B+C1	EC Type-examination + Conformity type
IV	B+F	EC Type-examination + Prod verification
Unit	G	EC Unit verification

EMC - Directive 2004/108/EC (and former Directive 89/336/EEC modified by the Directives 91/263CEE, 92/31CEE, 93/68CEE and 93/97CEE)

Our equipments meet the European Directive 2004/108/EC relating to Electromagnetic Compatibility. Its conformity has been checked with the Harmonized Standard EN 61326:1997 (and EN 61326/A1:1998 and EN 61326/A2:2001) "Electrical equipment for measurement, control and laboratory use" approved by CENELEC.

- EN 61000-3-3: Limitation of voltage changes, voltage fluctuations and flicker in public low-voltage supply systems.
- EN 55011 (CISPR 11): Industrial and, scientific radio-frequency equipment.

LVD - Directive 2006/95/EC (and former Directive 73/23/EEC)

Our equipments meet the European Directive 2006/95/EC relating to Electrical Safety (Low Voltage). Test of Electrical Safety according to the Standard EN 61010-1:

MACHINERY - Directive 2006/42/EC

Our equipments meets the Directive 2006/42/EC of the European Parliament and of the Council of 17 May 2006 on the approximation of the laws of the Member States relating to machinery.

ATEX - Directive 94/9/EC

Our equipments should not be used in potentially explosive atmospheres.

The Directive 94/9/EC (related to the approximation of the Member States concerning equipment and protection systems for its use under potentially explosive atmospheres) in its chapter I, article 1, section 4, establish that:

"Excluded from the application ambit of this Directive are those equipments which are destined to be used under no commercial settings where the potentially explosive atmospheres are created in rare occasions only as consequence of a fortuity escape of gas."

The Directives 94/9/EC, establish in the section 4.1.2. a) that:

"It is considered that an equipment only enter in the application ambit of the Directive if it is destined (in its totality or partial) to be used in potentially explosive atmosphere. The fact that in the interior of the equipment deliberately, could be a potentially explosive atmosphere has no relevance".

CONGRESS PARTICIPATION

As International marketing activities, PID Eng&Tech has participated in several congresses around the World.

From 2003 the Company opened new markets and starts its Internationalization in Europe, Middle East, Asia, EEUU and South America. The most important business activity of PID during these 8 years was based on **Customer confidence activities** and **Congress assistance**. Nowadays we are looking for covering through Distributors the most strategic markets for our products.

PID Eng&Tech has attended the following events:

- **XXII CICAT 2010** 5-10 September 2010 Con-Cón, Chile
- **COST Chemistry Workshop** 21-23 October 2009. Benahavís, Spain.
- **SOUTH AMERICA CONGRESS ON CATALYSIS**13-17 September 2009. Buzios, Brazil.
- **EUROPACAT IX** 1-4 September 2009. Salamanca, Spain.
- **NATIONAL AMERICA SOCIETY ON CATALYSIS** 7-12 June 2009. San Francisco, USA.
- **ICC 2008. 14th International Congress on Catalysis** 13-18 July 2008. COEX, Seoul, Korea.
- **WPC 2008. 19th World Petroleum Congress** 29 June-3 July 2008. IFEMA, Madrid, Spain
- **ISFL 2008. 6th International Symposium on Fuels and Lubricants** 9-12 March 2008. New Delhi, India.
- **PITTCON 2008.Pittsburgh Conference on Analytical Chemistry and Applied Spectroscopy** 2-6 March 2008. New Orleans, USA.
- **EUROPACAT VIII.** 26-31 August 2007. Turku, Findland.
- **PITTCON 2007. Pittsburgh Conference on Analytical Chemistry and Applied Spectroscopy.** February 25 - March 2 2007. Chicago, Illinois, USA.
- **OPERANDO II**. Second International Congress on Operando Spectroscopy. 23-27 April 2006. Toledo, Spain.
- **EXPOQUIMIA 2005**. 14-18 November 2005. Fira de Barcelona, Spain.
- **EUROPACAT VII. Catalysis: A Key To A Richer & Cleaner Society.** 28 August - 1 September 2005. Sofia – Bulgaria
- **VII SEMINARIO ITALIANO DE CATALISI.** 19-24 June 2005. Verbania-Pallanza, Italy.
- **NORTH AMERICAN MEETING ON CATALYSIS 2005**. 20-25 May 2005. Philadelphia, Pennsylvania, USA.
- **XXXVIII JAHRESTREFFEN DEUTSCHER KATALYTIKER**. 16-18 March 2005. Weimar, Germany.
- **13th INTERNATIONAL CONGRESS ON CATALYSIS.** 11-16 July 2004. Palais des Congrès, Paris, France.
- **BIOTECHNICA 2003**. October 2003. Hannover, Germany.

PID Eng&Tech will attend these Congresses during the next four years:

- 2011 **EuropaCat X** Scotland.
- 2012 15th **International Catalyst Congress** Munich, Germany.

R&D ACTIVITIES & PATENTS

PID Eng&Tech experiences continuous growth and strives to expand its product line through various research projects and research investments. PID Eng&Tech in collaboration with **Catalysis and Petroleochemestry Institute (CSIC, Spain)** has been working in new investigation lines and in the development and improvements of the products. This investment has the following objectives:

- **LEADERSHIP**: development of devices and instruments that solve the problems inherent in micro scale (components of limited dimensions, small volumes or quantities of matter, etc.). PID is a World leader in micro scale systems.
- **INNOVATION**: Control systems development capable of manage the variables related to the micro-process, allowing the stability and safety of the process in addition to automating the operation of the plant. Moreover, PID takes part in numerous technological programs and projects.
- **QUALITY** and **SECURITY**: Analysis of risks that make necessary the incorporation of devices that guarantees the safety in all the phases of the process. PID has certification ISO 9001 and ISO 14000 that is the result of fulfilment of all the instructions that are applicable to its products. In addition, with all equipment PID supplies the Declaration of Conformity that is demanded by the European Institutions.

Some of the R&D governmental projects subsidized by CDTI, IMADE, MITYC and MEC are:

PIE PROJECT

- "Investigation and development of a monitorized system and advance control for bioreactors".2006
- "Research and development of an automated and computerized micro reactors system for combinatorial chemistry, with an "in situ" analysis", 2005.
- "Research and development of an automated lab-scale reactor for catalytic microactivity studies of chemical reactions", 2004.
- "Development of a monitory system and advanced control for bioreactors",2007.
- "Design of a simulated moving bed on micro-scale for a mix resolution"2008
- Studies of the technical viability of a system for data acquisition and advanced control on micro-scale",2009.

PROFIT PROJECT

- "Technical viability study for monitorization and advance control system, automatic, integrated and universal for bioreactors to laboratory scale, pilot and semi-industrial with sterilization " In situ" ", 2006.
- "Research and development of a new catalytic Microactivity reactor", 2004.
- "Research and development of an automated pilot plant for extraction at supercritical conditions", 2005

NEOTEC PROJECT

- "Instrument and equipments for specific processes of chemical research", 2004-2005. CDTI.
- "Equipment for the study on micro scale for physical and chemical process and industrial bioprocess" 2008-2009.CDTI.

TORRES QUEVEDO PROGRAM

- "Viability study for development an automated unit for the study and evaluation of catalysts in the process FCC (Fluid Catalytic Cracking)", 2005.
- "Critical and technical viability studies for investigation and posterior development of micro reactors system for combinatory chemistry with "in situ" analysis", 2005.
- "Critical and technical viability studies for investigation and posterior development of SCADA system for bioreactors", 2004.

PATENTS

CSIC (Spanish Council for Scientific Research), proprietor of the patents listed below, granted PID Eng&Tech, under the Patent License Agreement, to make, have made, use, sell, offer to sell and export products.

- Automated reactor for catalytic microactivity studies: ES-2245238 / PTC-ES2005/070079 / WO-2006008328 / EP-1757930 / US-2008063565
- Servopositioner for microregulation valve: ES-2245239 / PCT-ES2005/070080 / WO-2006021603 / EP-1775504 / US-2007241296
- Capacitive level sensor for reduced volume systems: ES-2249139 / PCT-ES2005/070081 / WO-2006021604 / EP-1757911 / US-2007283753
- Modular integrated elements for processes control: ES-2032182
- Computerized Unit for FCC catalysts studies and evaluation: ES-2011993
- Method of immobilizing hydrocarbons inside submerged containers or of transporting said hydrocarbon to the surface, using the properties of supercritical fluids at a great depth: WO-2004065526 / EP-1595786 / NO-20053945 / CA-2514171 / US-2006016828
- Immobilising or removing hydrocarbons inside sunken tanker ships, by delivering fluid into tank and then degassing the resulting supercritical fluid: ES-2213476 / ES-2214974

OUR CUSTOMERS OPINIONS

"Design of Laboratory and Bench scale process plants is not really an easy task..., unless you work with PID Eng&Tech. R&D in Chemical Processes relies strongly on having excellent instrumentation and control systems, like those provided by them"

Dr. David Serrano, Director, Energy Institute

"We at NUCAT are very satisfied with the Microactivity reactor from PID Eng&Tech. Since the first contact everyone was very helpful and cordial and, above all, very fast in their responses and eager to provide us with the best solution for the problem we had.
When the unit arrived it performed up to expectations and according to what was asked. Some people in the lab were concerned about technical assistance because at that time there was no representative in Brazil. When the first technical problem occurred the solution was provided by a simple exchange of e-mails, showing how committed the company is in order to have a satisfied costumer.
At this time, I am really forward to buy two more units from this very professional and fantastic company"

Dr. Victor Teixeira da Silva, NUCAT /COPPE, Universidade Federal do Rio de Janeiro

"PID Eng&Tech is a fascinating company. It is like a dream come true for the applied researcher, enabling him to overcome many of the challenges related to the development of sophisticated experimental equipment in the area of Chemical Engineering. Since the creation of PID Eng&Tech we have commissioned a number of original experimental devices designed for solid fuel gasification, CO_2 capture by solid sorbents and others reactors or pilot plants. We are confident that our fruitful collaboration will continue in the future".

Dr. José J. Pis, Carbon National Institute, CSIC

It is a real pleasure to give you some good and very positive feedbacks concerning the use of the PID Eng&Tech Microactivity catalytic reactor. During the experiments and catalytic reactions we carried out with the Microactivity-Reference catalytic reactor, we could observe a totally satisfactory functioning and could appreciate the high friendliness of its use; we could therefore obtain nice and reliable results in our various studies. We are very satisfied.

Dr. Jean Thivolle-Cazat, National Center of Scientific Research, SOMC, France

"It is a great pleasure for me to be given this opportunity to say a few things about PID Eng&Tech. I have been closely cooperating with PID Eng&Tech and in particular with its director Dr. Jose Prieto, for the last eight years. I have to stress out from the beginning that it has been eight years of a fruitful and flawless cooperation.
I have purchased from PID five different units so far and I am completely satisfied by their quality, durability and their overall performance. Based on my experience, I can assure that PID Eng&Tech is able to offer a multi-level support which starts with specialized equipment design and reaches out to maintenance and after-sale support. During these years of cooperation I have experienced only purely professional treatment by the company at the following levels:

- Equipment Design: The experts of PID have helped me and my group with the designing of sophisticated and complex equipment, which is used for advanced scientific experiments, by providing valuable information and practical solutions to all the problems that came in our way.

- Training: The training programs given by PID consist an adequate way of understanding the operation and maintenance of their products. It is worthwhile to notice that all training programs are carried out on same unit to be purchased, something which is very helpful for the end users of the unit.

- Installation: All the units that I have purchased so far have arrived at my laboratory in a perfect state and almost ready for use. Installation requires only the necessary connections to the gasses and/or liquid supplies….. and the unit is ready for use.

- Maintenance: After attending the training program at PID, maintenance becomes very easy by all means.

- After-sale Support: The after-sale support at PID Eng&Tech is probably the best, most professional kind of support that I have experienced so far in my career. The people at PID Eng&Tech have helped me and my group numerous times with any modifications, adjustments and changes that we need to make in our equipments. They always answer promptly and they always deliver within reasonable time. They are fast and effective.
Finally, I would like to thank the director and all the personnel of PID for their valuable cooperation so far and assure that our cooperation will continue to exist for many years".

Prof. Costas N. Costa, Deputy Coordinator, Cyprus University of Technology

"The best of PID Eng&Tech is that they listen to your technical requirements and offer a personalized solution quickly by adapting their standard processes. They are able to discern between your scientific and technical problems, they can offer you solutions!"

Dr. Mario Montes, Euskal Herriko Unibertsitatea

"We are getting excellent performance with Microactivity reactors and pilot plants from PID Eng&Tech".

Prof. Fierro, Catalysis and Petroleochemestry Institute

"I highly recommend PID Eng&Tech. Their Microactivity reactor is quite impressive, and we are planning to buy other units from the same company".

Prof. Saeed M. Al-Zahrani, Chemical Engineer Department King Saudi University

PID Eng&Tech

www.pidengtech.com